TEST REPORT

Product Name : Off-grid inverter
Model Number : XN6548-MAX

Prepared for	:	INVT Solar Technology (ShenZhen) Co., Ltd.
Address	:	6th Floor, Block A, INVT Guangming Technology Building, Kejie Fourth Road, Shutianpu Community, Matian Guangming District, 518000 Shenzhen, PEOPLE'S REPUBLIC OF CHINA
Prepared by	:	EMTEK (SHENZHEN) CO., LTD.
Address	:	Building 69, Majialong Industry Zone, Nanshan District, Shenzhen, Guangdong, China Tel: (0755) 26954280 Fax: (0755) 26954282

Report Number	:	ENS2510160066E00301R
Date(s) of Tests	:	September 01, 2025 to September 10, 2025
Date of issue	:	October 21, 2025

TABLE OF CONTENT

Test Report Description Page

1. SUMMARY OF TEST RESULT 6

2. GENERAL INFORMATION 7

2.1 Description of Device (EUT) 7
2.2 Independent Operation Modes 7
2.3 Test Manner 8
2.4 Description of Support Device 8
2.5 Description of Test Facility 8
2.6 Measurement Uncertainty 9

3. MEASURING DEVICE AND TEST EQUIPMENT 10

3.1 For Conducted Emission Measurement 10
3.2 Radiated Emission Measurement (3m) 10
3.3 For Harmonic Current / Flicker Measurement 10
3.4 For Electrostatic Discharge Immunity Test 10
3.5 For RF Strength Susceptibility Test 11
3.6 For Electrical Fast Transient / Burst Immunity Test 11
3.7 For Surge Immunity Test 11
3.8 For Injected Current Susceptibility Test 12
3.9 For Magnetic Field Immunity Test 12
3.10 For Voltage Dips and Interruptions Test 12

4. CONDUCTED EMISSION MEASUREMENT 13

4.1 Block Diagram of Test Setup 13
4.2 Measuring Standard 13
4.3 Conducted Emission Limits 13
4.4 Test Procedure 14
4.5 Measuring Results 14

5. RADIATED EMISSION MEASUREMENT 17

5.1 Block Diagram of Test Setup 17
5.2 Measuring Standard 17
5.3 Radiated Emission Limits 17
5.4 Test Procedure 18
5.5 Measuring Results 18

6. HARMONIC CURRENT EMISSION MEASUREMENT 21

6.1 Block Diagram of Test Setup 21
6.2 Standard Limits 21
6.3 Test Results 21

7. VOLTAGE FLUCTUATION AND FLICKER MEASUREMENT 25

7.1 Block Diagram of Test Setup 25
7.2 Standard Limits 25
7.3 Test Procedure 25
7.4 Test Results 25

8. IMMUNITY PERFORMANCE CRITERIA DESCRIPTION 27

9. ELECTROSTATIC DISCHARGE IMMUNITY TEST 28

9.1 Block Diagram of Test Setup 28
9.2 Test Standard 28
9.3 Severity Levels and Performance Criterion 28
9.4 Test Procedure 29
9.5 Test Results 29

10. RF FIELD STRENGTH SUSCEPTIBILITY TEST 31

10.1 Block Diagram of Test Setup 31
10.2 Test Standard 31
10.3 Severity Levels and Performance Criterion 31
10.4 Test Procedure 32
10.5 Test Results 32

11. ELECTRICAL FAST TRANSIENT/BURST IMMUNITY TEST 34

11.1 Block Diagram of Test Setup 34
11.2 Test Standard 34
11.3 Severity Levels and Performance Criterion 35
11.4 Test Procedure 35
11.5 Test Results 35

12. SURGE IMMUNITY TEST 37

12.1 Block Diagram of Test Setup 37
12.2 Test Standard 37
12.3 Severity Levels and Performance Criterion 37
12.4 Test Procedure 37
12.5 Test Results 38

13. INJECTED CURRENTS SUSCEPTIBILITY TEST 40

13.1 Block Diagram of Test Setup 40
13.2 Test Standard 40
13.3 Severity Levels and Performance Criterion 40
13.4 Test Procedure 40
13.5 Test Results 41

14. MAGNETIC FIELD SUSCEPTIBILITY TEST 43

14.1 Block Diagram of Test Setup 43
14.2 Test Standard 43
14.3 Severity Levels and Performance Criterion 43
14.4 Test Procedure 44
14.5 Test Results 44

15. VOLTAGE DIPS AND INTERRUPTIONS TEST 46

15.1 Block Diagram of Test Setup 46
15.2 Test Standard 46
15.3 Severity Levels and Performance Criterion 46
15.4 Operating Condition of EUT 46
15.5 Test Procedure 47
15.6 Test Results 47

16. PHOTOGRAPHS 49

16.1 Photos of Conducted Emission Measurement 49
16.2 Photos of Radiation Emission Measurement 50
16.3 Photo of Harmonic / Flicker Measurement 51
16.4 Photo of Electrostatic Discharge Test 51
16.5 Photo of RF Field Strength Susceptibility Test 52
16.6 Photos of Electrical Fast Transient / Burst Test 52
16.7 Photo of Surge Test 53
16.8 Photos of Injected Currents Susceptibility Test 54
16.9 Photo of Magnetic Field Immunity Test 55
16.10 Photo of Voltage Dips and Interruptions Test 56

APPENDIX (Photos of EUT)

TEST REPORT DESCRIPTION

Applicant	:	INVT Solar Technology (ShenZhen) Co., Ltd.
Manufacturer	:	INVT Solar Technology (ShenZhen) Co., Ltd..
Trademark	:	INVT
EUT	:	Off-grid inverter
Model No.	:	XN6548-MAX
Rating	:	AC Output: Rated Power a.c. :6500VA/6500W Rated Voltage a.c. : 230V Rated Current a.c. : 28.3A Battery: Voltage Range d.c. : 40-60V; Rated Voltage d.c. : 48V AC Input: Rated Power a.c. : 90-280V; Frequency : 50Hz/60Hz; Max AC Bypass Current a.c. : 40A; Max AC Charge Current a.c. : 120A PV Input: Max Power d.c. : 9000W; Max. Open Voltage d.c. : 500V; Max PV input current d.c. : 27A; MPPT Input Voltage Range d.c. : 60-450V; Max Charge Current d.c. : 120A

Measurement Procedure Used:
EN IEC 61000-6-4:2019, IEC 61000-6-4:2018
EN 61000-3-12:2011, IEC 61000-3-12:2011
EN IEC 61000-3-11:2019, IEC 61000-3-11:2017
EN IEC 61000-6-2:2019, IEC 61000-6-2:2016
(IEC 61000-4-2:2008, IEC 61000-4-3:2006+A1:2007+A2:2010, IEC 61000-4-4:2012,
IEC 61000-4-5:2014, IEC 61000-4-6:2013, IEC 61000-4-8:2009, IEC 61000-4-11:2004,
IEC 61000-4-34:2005+A1:2009)

The device described above is tested by EMTEK (SHENZHEN) CO., LTD. to determine the maximum emission levels emanating from the device and the severe levels of the device can endure and its performance criterion. The measurement results are contained in this test report and EMTEK (SHENZHEN) CO., LTD. is assumed full of responsibility for the accuracy and completeness of these measurements. Also, this report shows that the EUT (Equipment Under Test) is technically compliant with the EN IEC 61000-6-4, EN 61000-3-12, EN IEC 61000-3-11, EN IEC 61000-6-2 requirements.

This report applies to above tested sample only and shall not be reproduced in part without written approval of EMTEK (SHENZHEN) CO., LTD.

Date of Test	:	September 01, 2025 to September 10, 2025
Prepared by	:	Yuxiang Yuan/Editor
Reviewer	:	Kaimin Guo/Supervisor
Approved & Authorized Signer	:	Lisa Wang/Manager

EMTEK (SHENZHEN) CO., LTD. TESTING

Modified Information

Version	Report No.	Revision Date	Summary
Ver.1.0	ENS2510160066E00301R	/	Original Report

1. SUMMARY OF TEST RESULT

EMISSION				
Description of Test Item		Standard	Limits	Results
Conducted Disturbance at Mains Terminals	AC Mains port	EN IEC 61000-6-4:2019	Table 4	Pass
	DC Power port		Table A.1	N/A
Telecommunication/network port		Cited from CISPR 32	Table 5	N/A
Radiated emissions at frequencies up to 1 GHz		EN IEC 61000-6-4:2019	Table 3	Pass
Radiated emissions at frequencies above 1 GHz		EN IEC 61000-6-4:2019	Table 3	N/A
Harmonic Current Emissions		EN 61000-3-12:2011	Table 2	Pass
Voltage Fluctuation and Flicker		EN IEC 61000-3-11:2019	--	Pass

IMMUNITY (EN IEC 61000-6-2:2019)				
Description of Test Item		Basic Standard	Performance Criteria	Results
Electrostatic Discharge (ESD)		IEC 61000-4-2:2008	B	Pass
Radio-Frequency, Continuous Radiated Disturbance		IEC 61000-4-3:2006+A1:2007+A2:2010	A	Pass
EFT/B Immunity	Signal/control ports	IEC61000-4-4:2012	B	N/A
	DC power ports			Pass
	AC power ports			Pass
Surge Immunity	Signal/control ports	IEC 61000-4-5:2014	B	N/A
	DC power ports			Pass
	AC power ports			Pass
Conducted RF Immunity	Signal/control ports	IEC 61000-4-6:2013	A	N/A
	DC power ports			Pass
	AC power ports			Pass
Power Frequency Magnetic Field		IEC 61000-4-8:2009	A	Pass
Voltage Dips, >95% Reduction		IEC 61000-4-11:2004 IEC 61000-4-34:2005+A1:2009	B	Pass
Voltage Dips, 30% Reduction			C	Pass
Voltage Interruptions			C	Pass
Note: N/A means not applicable.				

2. GENERAL INFORMATION

2.1 Description of Device (EUT)

EUT	:	Off-grid inverter
Model Number	:	XN6548-MAX
Sample ID	:	ENS2508280270E002/1-1
Test Voltage	:	DC 450V, AC 230V/50Hz, DC 48V
Applicant	:	INVT Solar Technology (ShenZhen) Co., Ltd.
Address	:	6th Floor, Block A, INVT Guangming Technology Building, Kejie Fourth Road, Shutianpu Community, Matian Guangming District, 518000 Shen zhen, PEOPLE' S REPUBLIC OF CHINA
Manufacturer	:	INVT Solar Technology (ShenZhen) Co., Ltd.
Address	:	6th Floor, Block A, INVT Guangming Technology Building, Kejie Fourth Road, Shutianpu Community, Matian Guangming District, 518000 Shen zhen, PEOPLE' S REPUBLIC OF CHINA
Factory	:	INVT Solar Technology (ShenZhen) Co., Ltd.
Address	:	6th Floor, Block A, INVT Guangming Technology Building, Kejie Fourth Road, Shutianpu Community, Matian Guangming District, 518000 Shen zhen, PEOPLE' S REPUBLIC OF CHINA
Date of Received	:	September 01, 2025
Date of Test	:	September 01, 2025 to September 10, 2025

Note: This report is based on ENS2508280270E00201R change of applicant, manufacturer, factory, address, trademark, product name, model and product appearrance photos. This change or addition does not affect test results. The original data and records are referred to ENS2508280270E00201R.

2.2 Independent Operation Modes

A. On
   1. PV IN & AC Back UP
   2. AC Charging & AC Back Up
   3. Discharging & AC Back UP

2.3 Test Manner

Test Items	Test Voltage	Operation Modes	Worst case
Conducted disturbance at mains Terminals	AC 230V/50Hz	Mode A.2	Mode A.2
Radiated Disturbance	DC 450V AC 230V/50Hz DC 48V	Mode A	Mode A.2 (AC 230V/50Hz)
Harmonic Current Emissions	AC 230V/50Hz	Mode A.2	\
Voltage Fluctuation and Flicker	AC 230V/50Hz	Mode A.2	\
Electrostatic Discharge	DC 450V AC 230V/50Hz DC 48V	Mode A	\
Continuous RF electromagnetic field disturbances		Mode A	\
Electrical fast transients/burst	DC 450V AC 230V/50Hz	Mode A.1 Mode A.2	\
Surges		Mode A.1 Mode A.2	\
Continuous induced RF disturbances		Mode A.1 Mode A.2	\
Power frequency magnetic field	DC 450V AC 230V/50Hz DC 48V	Mode A	\
Voltage dips and interruptions	AC 230V/50Hz	Mode A.2	\

2.4 Description of Support Device

N/A

2.5 Description of Test Facility

Site Description

EMC Lab. : **Accredited by CNAS**
The Certificate Registration Number is L2291.
The Laboratory has been assessed and proved to be in compliance with CNAS-CL01 (identical to ISO/IEC 17025:2017)

Accredited by FCC
Designation Number: CN1204
Test Firm Registration Number: 882943

Accredited by A2LA
The Certificate Number is 4321.01.

Accredited by Industry Canada
The Conformity Assessment Body Identifier is CN0008

Name of Firm : EMTEK (SHENZHEN) CO., LTD.
Site Location : Building 69, Majialong Industry Zone, Nanshan District, Shenzhen, Guangdong, China

2.6 Measurement Uncertainty

Test Item		Uncertainty
Conducted Emission Uncertainty (Conduction 2#)	:	3.16dB (9k~150kHz Conduction) 2.90dB (150k-30MHz Conduction)
Radiated Emission Uncertainty (3m 3# Chamber)	:	4.28dB (30M~1GHz Polarize: H) 4.86dB (30M~1GHz Polarize: V)
Uncertainty for Flicker test	:	0.514%
Uncertainty for Harmonic test	:	4.04%
Uncertainty for C/S Test	:	0.94dB(Using CDN Test) 2.37dB(Using EM Clamp Test)
Uncertainty for R/S Test	:	1.53dB(80MHz-3000MHz)
Uncertainty for test site temperature and humidity	:	0.6℃ 4%

3. MEASURING DEVICE AND TEST EQUIPMENT

3.1 For Conducted Emission Measurement

Item	Equipment	Manufacturer	Model No.	Serial No.	Last Cal.	Cal. Interval
☑	EMI Test Receiver	Rohde & Schwarz	ESCI	101045	May 09, 2025	1 Year
☑	PULSE LIMITER	Schwarzbeck	VTSD 9561 F-B	00955	May 09, 2025	1 Year
☑	AMN	Schwarzbeck	NNLK 8129	8129203	May 09, 2025	1 Year

3.2 Radiated Emission Measurement (3m)

Used	Equipment	Manufacturer	Model No.	Serial No.	Last Cal.	Cal. Interval
☑	EMI Test Receiver	Rohde & Schwarz	ESU 26	100154	May 09, 2025	1 Year
☑	Pre-Amplifie	Lunar EM	LNA30M3G-25	J10100000070	May 09, 2025	1 Year
☑	Bilog Antenna	Schwarzbeck	VULB9163	661	June 02, 2023	2 Year

3.3 For Harmonic Current / Flicker Measurement

Used	Equipment	Manufacturer	Model No.	Serial No.	Last Cal.	Cal. Interval
☑	45KVA AC Power source	Teseq	NSG 1007-45/45KVA	1305A02873	May 10, 2025	1 Year
☑	Signal conditioning Unit	Teseq	CCN 1000-3	1305A02873	May 10, 2025	1 Year
☑	Impedance network	Teseq	INA2197/37A	1305A02873	May 10, 2025	1 Year
☑	Impedance network	Teseq	INA 2196/75A	1305A02874	May 10, 2025	1 Year
☐	Profline 2100 AC Switching Unit	Teseq	NSG 2200-3	A22714	May 10, 2025	1 Year

3.4 For Electrostatic Discharge Immunity Test

Item	Equipment	Manufacturer	Model No.	Serial No.	Last Cal.	Cal. Interval
☑	ESD Tester	TESEQ	NSG 438	1881	April 27, 2025	1 Year

3.5 For RF Strength Susceptibility Test

Item	Equipment	Manufacturer	Model No.	Serial No.	Last Cal.	Cal. Interval
☑	Power Amplifier	MILMEGA	AS0102-55	1018770	May 09, 2025	1 Year
☑	RF Power Meter. Dual Channel	BOONTON	4232A	10539	May 09, 2025	1 Year
☑	Log.-Per. Antenna	SCHWARZBECK	STLP 9129-7/16	3050	N/A	N/A
☑	Signal Generator	Agilent	N5181A	MY50145187	May 09, 2025	1 Year
☑	50ohm Diode Power Sensor	BOONTON	51011EMC	36164	May 09, 2025	1 Year
☑	Field Strength Meter	DARE	RSS1006A	10I00037SNO22	May 13, 2025	1 Year
☑	Multi-function interface system	DARE	CTR1009B	12I00250SNO72	N/A	N/A
☑	Automatic switch group	DARE	RSW1004A	N/A	N/A	N/A
☑	Power Amplifier	MILMEGA	AS1860-50	1059346	May 09, 2025	1 Year
☑	Power Amplifier	Vectawave	VBA 1000-600C	133627	Oct. 18, 2024	1 Year
☑	Directional Coupler	BONN	BDC 0810-50/1500	2229689	Oct. 18, 2024	1 Year

3.6 For Electrical Fast Transient / Burst Immunity Test

Item	Equipment	Manufacturer	Model No.	Serial No.	Last Cal.	Cal. Interval
☑	Burst Tester	Partner	IMU-MGS	109938-1635	Oct. 18, 2024	1 Year
☑	Coupling Clamp	HAEFELY	IP-4A	147147	May 09, 2025	1 Year
☑	Three phase CDN	Teseq	CDN 163	202	May 09, 2025	1 Year

3.7 For Surge Immunity Test

Item	Equipment	Manufacturer	Model No.	Serial No.	Last Cal.	Cal. Interval
☑	Impulse Module	HTEC	HCWG100	223602	Nov. 01, 2024	1 Year

3.8 For Injected Current Susceptibility Test

Item	Equipment	Manufacturer	Model No.	Serial No.	Last Cal.	Cal. Interval
☑	Continuous Wave Simulator	EMTEST	CWS500C	0900-12	May 11, 2025	1 Year
☑	Three phase CDN	TESEQ	CDN M532S	33799	May 11, 2025	1 Year
☑	Attenuator	EMTEST	100W 6dB DC-3G	/	May 11, 2025	1 Year
☑	Signal Generator	R&S	SMB100A	103041	May 09, 2025	1 Year
☑	EM Injection Clamp	EMTEST	F-2031-23MM	368	May 09, 2025	1 Year
☑	Power meter	AGILENT	E4418B	MY45102886	May 11, 2025	1 Year
☑	Directional coupler	SKET	DC_0110000 M-100W	SK2018080301	May 11, 2025	1 Year

3.9 For Magnetic Field Immunity Test

Item	Equipment	Manufacturer	Model No.	Serial No.	Last Cal.	Cal. Interval
☑	Magnetic Field Tester	HAEFELY	MAG100	250040.1	May 10, 2025	1 Year

3.10 For Voltage Dips and Interruptions Test

Used	Equipment	Manufacturer	Model No.	Serial No.	Last Cal.	Cal. Interval
☑	45KVA AC Power source	Teseq	NSG 1007-45/45KVA	1305A02873	May 10, 2025	1 Year
☐	Signal conditioning Unit	Teseq	CCN 1000-3	1305A02873	May 10, 2025	1 Year
☐	Impedance network	Teseq	INA2197/37A	1305A02873	May 10, 2025	1 Year
☐	Impedance network	Teseq	INA 2196/75A	1305A02874	May 10, 2025	1 Year
☑	Profline 2100 AC Switching Unit	Teseq	NSG 2200-3	A22714	May 10, 2025	1 Year

4. CONDUCTED EMISSION MEASUREMENT

4.1 Block Diagram of Test Setup

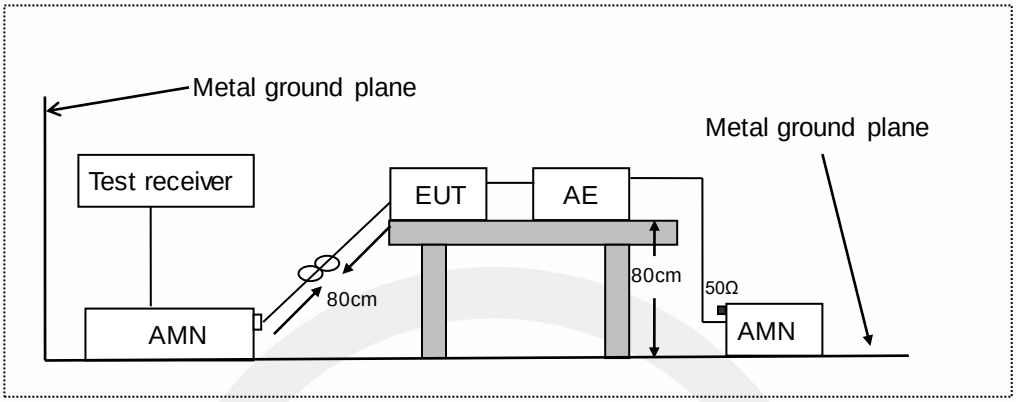

LISN: Artificial Mains Network
AE: Associated equipment
EUT: Equipment under test

4.2 Measuring Standard

EN IEC 61000-6-4: 2019

4.3 Conducted Emission Limits

☑ AC Mains port:

Frequency (MHz)	Limit (dBμV)	
	Quasi-peak Level	Average Level
0.15 ~ 0.50	79.0	66.0
0.50 ~ 30.00	73.0	60.0
NOTE 1-The lower limit shall apply at the transition frequencies.		

☐ DC Power port:

Frequency (MHz)	Limit (dBμV)	
	Quasi-peak Level	Average Level
0.15 ~ 0.50	89.0	76.0
0.50 ~ 30.00	83.0	70.0
NOTE 1-The lower limit shall apply at the transition frequencies.		

4.4 Test Procedure

The EUT is put on the plane 0.8m high above the ground by insulating support and connected to the AC/DC mains through Line Impedance Stability Network (L.I.S.N). This provided a 50ohm coupling impedance for the tested equipment. Both sides of AC/DC line are investigated to find out the maximum conducted emission according to the EN 61000-6-4 regulations during conducted emission measurement.
The bandwidth of the field strength meter (R&S Test Receiver ESCS30) is set at 9kHz in 150kHz~30MHz and 200Hz in 9kHz~150kHz.
The frequency range from 150kHz to 30MHz is investigated.

4.5 Measuring Results

PASS.

Please see the following pages.

Temperature	:	28.3°C
Humidity	:	60%
Atmospheric Pressure	:	101kpa
Test Engineer	:	Zhuowen Sheng
Test Date	:	2025-09-10

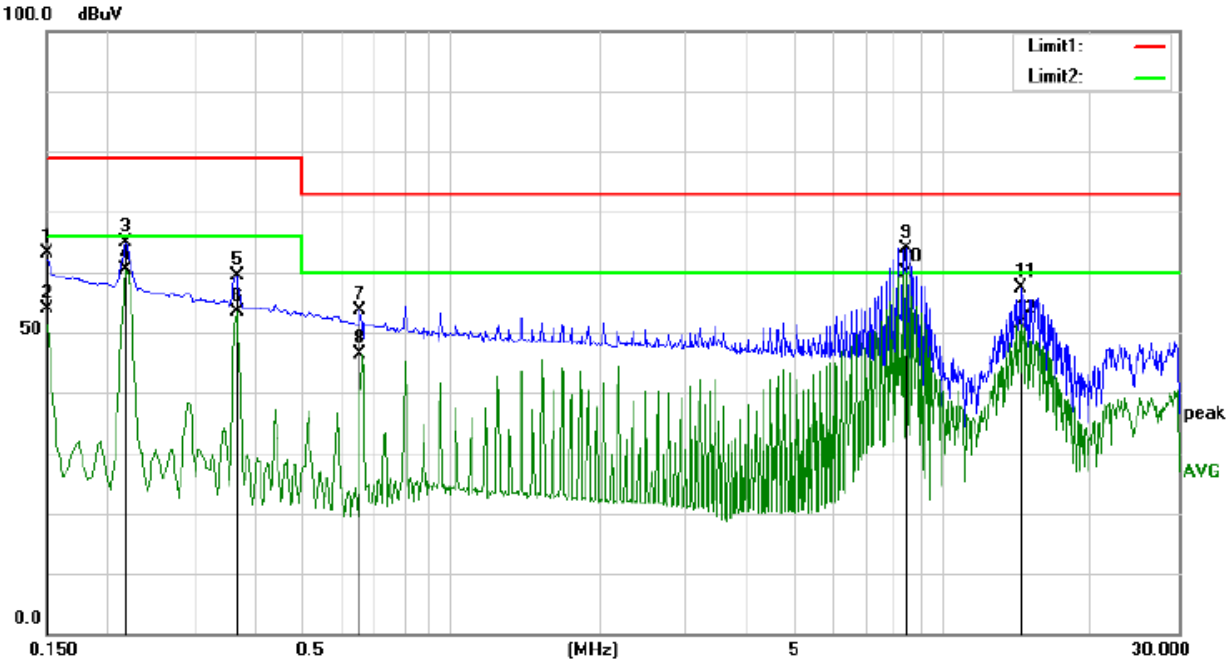

Site Conduction 2# Phase: *L1* Temperature: 28.3

Limit: (CE)EN61000-6-4_QP Power: AC 230V/50Hz Humidity: 60 %

Mode: AC Charging

Note:

No.	Mk.	Freq.	Reading Level	Correct Factor	Measure-ment	Limit	Over		
		MHz	dBuV	dB	dBuV	dBuV	dB	Detector	Comment
1		0.1500	52.41	10.62	63.03	79.00	-15.97	QP	
2		0.1500	43.29	10.62	53.91	66.00	-12.09	AVG	
3		0.2180	54.40	10.60	65.00	79.00	-14.00	QP	
4		0.2180	49.90	10.60	60.50	66.00	-5.50	AVG	
5		0.3660	48.68	10.60	59.28	79.00	-19.72	QP	
6		0.3660	42.67	10.60	53.27	66.00	-12.73	AVG	
7		0.6540	42.89	10.68	53.57	73.00	-19.43	QP	
8		0.6540	35.68	10.68	46.36	60.00	-13.64	AVG	
9		8.3900	52.74	11.18	63.92	73.00	-9.08	QP	
10	*	8.3900	48.65	11.18	59.83	60.00	-0.17	AVG	
11		14.3700	45.98	11.39	57.37	73.00	-15.63	QP	
12		14.3700	40.04	11.39	51.43	60.00	-8.57	AVG	

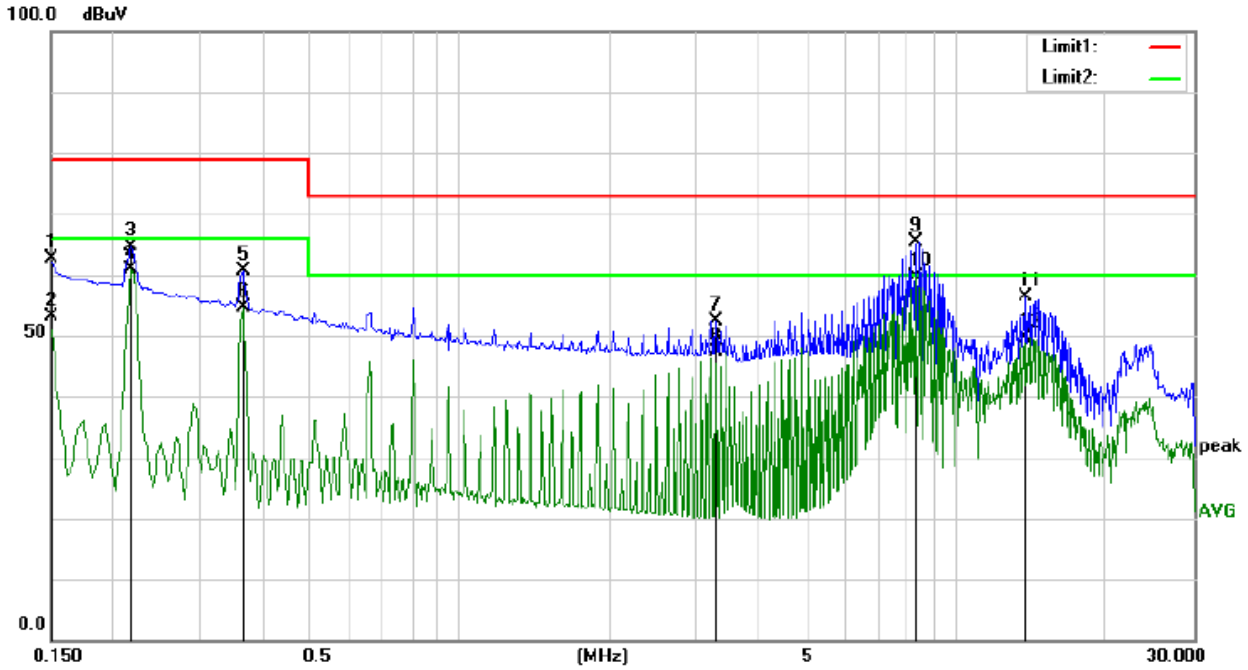

Site Conduction 2# Phase: *N* Temperature: 28.3

Limit: (CE)EN61000-6-4_QP Power: AC 230V/50Hz Humidity: 60 %

Mode: AC Charging

Note:

No.	Mk.	Freq.	Reading Level	Correct Factor	Measure-ment	Limit	Over		
		MHz	dBuV	dB	dBuV	dBuV	dB	Detector	Comment
1		0.1500	52.14	10.61	62.75	79.00	-16.25	QP	
2		0.1500	42.55	10.61	53.16	66.00	-12.84	AVG	
3		0.2180	54.05	10.62	64.67	79.00	-14.33	QP	
4		0.2180	50.25	10.62	60.87	66.00	-5.13	AVG	
5		0.3660	49.93	10.62	60.55	79.00	-18.45	QP	
6		0.3660	43.97	10.62	54.59	66.00	-11.41	AVG	
7		3.2860	41.62	10.88	52.50	73.00	-20.50	QP	
8		3.2860	36.49	10.88	47.37	60.00	-12.63	AVG	
9		8.2420	54.20	11.16	65.36	73.00	-7.64	QP	
10	*	8.2420	48.39	11.16	59.55	60.00	-0.45	AVG	
11		13.7860	44.98	11.35	56.33	73.00	-16.67	QP	
12		13.7860	38.32	11.35	49.67	60.00	-10.33	AVG	

5. RADIATED EMISSION MEASUREMENT

5.1 Block Diagram of Test Setup

Up to 1GHz:

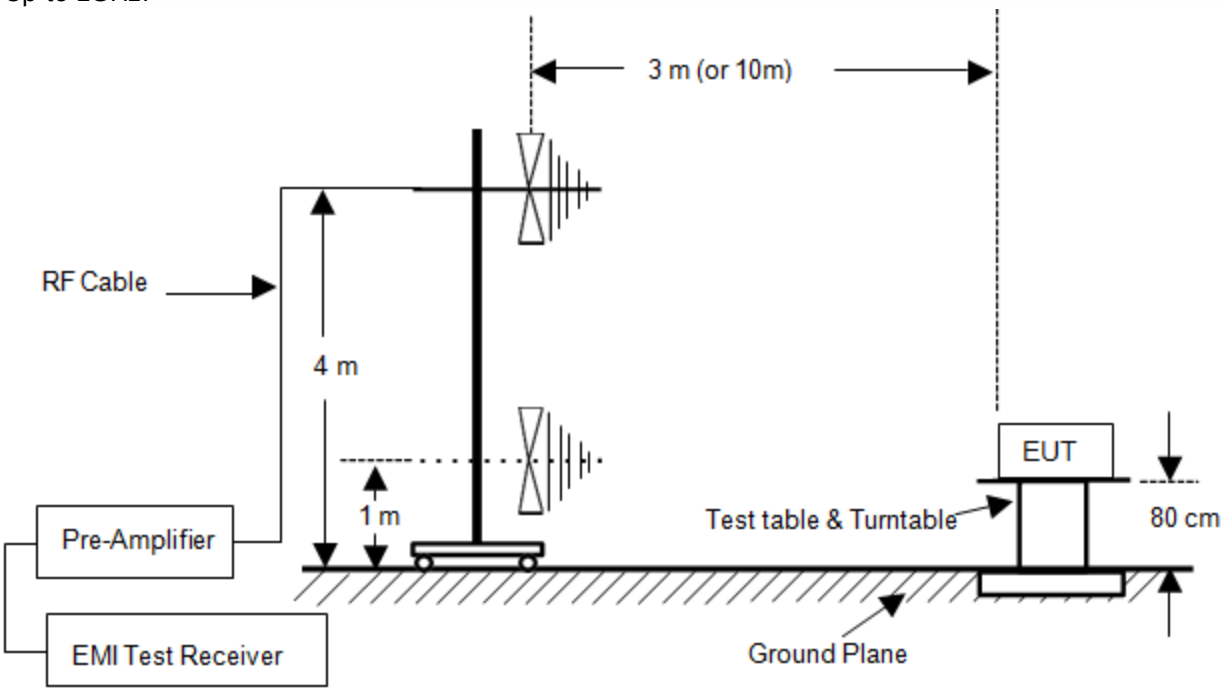

5.2 Measuring Standard

EN IEC 61000-6-4: 2019

5.3 Radiated Emission Limits

FREQUENCY (MHz)	DISTANCE (Meters)	FIELD STRENGTHS LIMIT (dBμV/m)
30 ~ 230	3	50
230 ~ 1000	3	57

Note: (1) The smaller limit shall apply at the combination point between two frequency bands.
(2) Distance refers to the distance in meters between the measuring instrument antenna and the closed point of any part of the EUT.

5.4 Test Procedure

The EUT is placed on a turntable which is 0.8 meter high above the ground. The turntable can rotate 360 degrees to determine the position of the maximum emission level. The EUT is set 10 meters away from the receiving antenna that is mounted on a antenna tower. The antenna can be moved up and down from 1 to 4 meters to find out the maximum emission level. Bilog antenna (calibrated by Dipole Antenna) is used as a receiving antenna. Both horizontal and vertical polarization of the antenna is set on test.

The bandwidth of the Receiver is set at 120kHz.

5.5 Measuring Results

PASS.

The frequency range from 30MHz to 1000MHz is investigated.

All the modes were tested and the data of the worst modes are attached the following pages.

Temperature	:	24.9°C
Humidity	:	58%
Atmospheric Pressure	:	101kpa
Test Engineer	:	Huan Yang
Test Date	:	2025-05-15

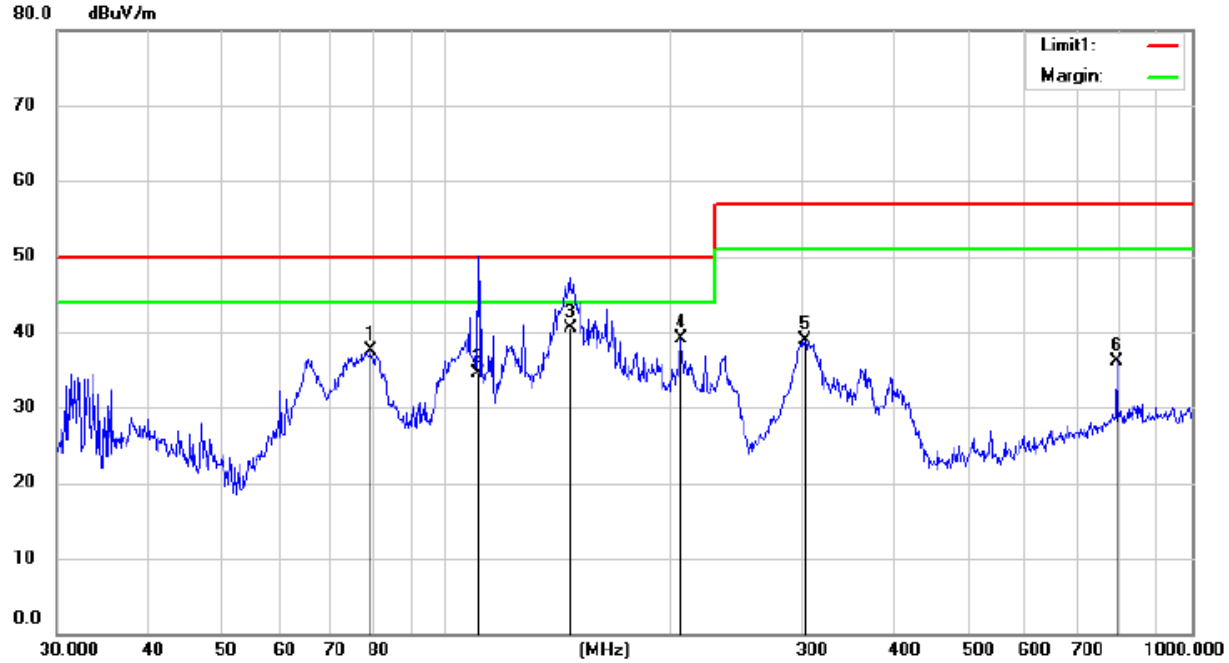

Site 3m Chamber #3 Polarization: ***Horizontal*** Temperature: 25.2 C

Limit: (RE)EN61000-6-4 Power: AC 230V/50Hz Humidity: 56 %

Mode:AC Charging

Note:

No.	Mk.	Freq.	Reading Level	Correct Factor	Measure-ment	Limit	Over		Antenna Height	Table Degree	
		MHz	dBuV	dB	dBuV/m	dBuV/m	dB	Detector	cm	degree	Comment
1		78.9652	55.32	-17.90	37.42	50.00	-12.58	QP			
2		110.2300	49.11	-14.61	34.50	50.00	-15.50	QP			
3	*	146.7590	57.59	-17.09	40.50	50.00	-9.50	QP			
4		206.8504	52.69	-13.57	39.12	50.00	-10.88	QP			
5		303.5437	49.18	-10.34	38.84	57.00	-18.16	QP			
6		795.1367	34.65	1.47	36.12	57.00	-20.88	QP			

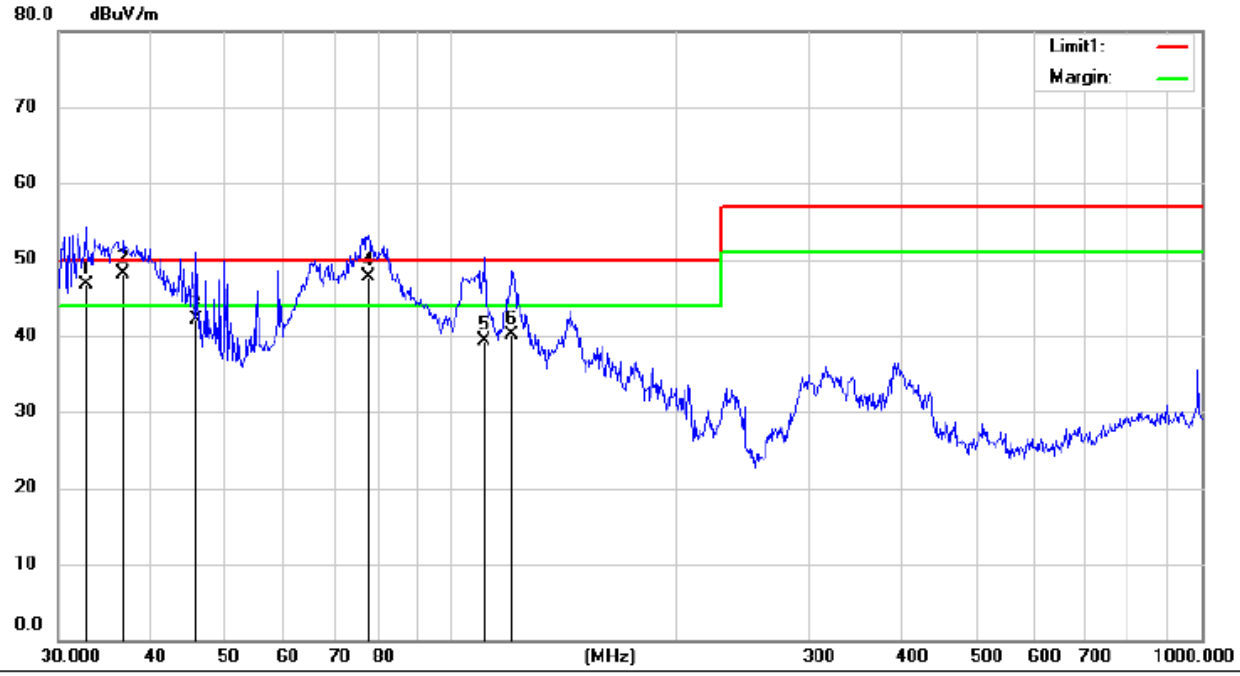

Site 3m Chamber #3 Polarization: *Vertical* Temperature: 25.2 C

Limit: (RE)EN61000-6-4 Power: AC 230V/50Hz Humidity: 56 %

Mode:AC Charging

Note:

No.	Mk.	Freq.	Reading Level	Correct Factor	Measure-ment	Limit	Over		Antenna Height	Table Degree	
		MHz	dBuV	dB	dBuV/m	dBuV/m	dB	Detector	cm	degree	Comment
1	!	32.7200	62.29	-15.49	46.80	50.00	-3.20	QP			
2	*	36.6857	62.80	-14.60	48.20	50.00	-1.80	QP			
3		45.9760	55.48	-13.38	42.10	50.00	-7.90	QP			
4	!	77.6268	65.40	-17.70	47.70	50.00	-2.30	QP			
5		111.0543	54.08	-14.68	39.40	50.00	-10.60	QP			
6		120.8580	55.88	-15.78	40.10	50.00	-9.90	QP			

6. HARMONIC CURRENT EMISSION MEASUREMENT

6.1 Block Diagram of Test Setup

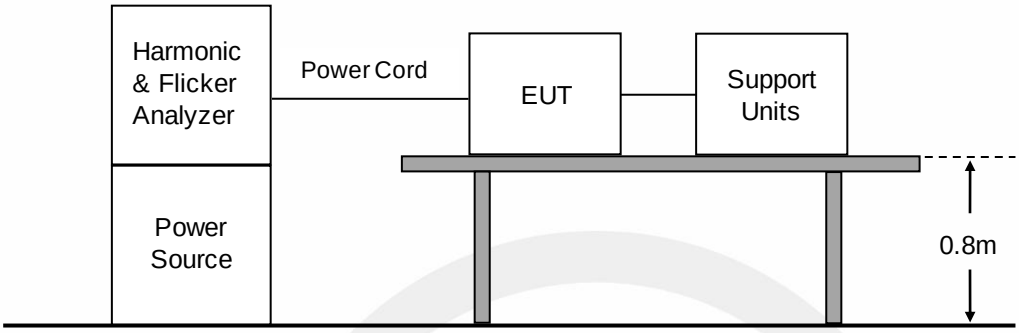

6.2 Standard Limits

EN 61000-3-12
Harmonic current emissions evaluate the potential for the EUT to cause distortion on the AC power lines. It is applicable to electrical and electronic equipment having an input current >16 A and ≤75 A per phase, and intended to be connected to public low-voltage distribution systems

Table 2 – Current emission limits for equipment other than balanced three-phase equipment

Minimum R_{sce}	Admissible individual harmonic current I_h/I_{ref} [a] %						Admissible harmonic parameters %	
	I_3	I_5	I_7	I_9	I_{11}	I_{13}	THC/I_{ref}	$PWHC/I_{ref}$
33	21,6	10,7	7,2	3,8	3,1	2	23	23
66	24	13	8	5	4	3	26	26
120	27	15	10	6	5	4	30	30
250	35	20	13	9	8	6	40	40
≥350	41	24	15	12	10	8	47	47
The relative values of even harmonics up to order 12 shall not exceed 16/h %. Even harmonics above order 12 are taken into account in THC and $PWHC$ in the same way as odd order harmonics. Linear interpolation between successive R_{sce} values is permitted.								
[a] I_{ref} = reference current; I_h = harmonic current component.								

6.3 Test Results

PASS.

Please see the attached pages.

Harmonics – Per EN/IEC61000-3-12 (Run time)

EUT: MPPT Solar Inverter **Tested by: xingjin lu**
Test category: Table:2, Rsce=33, Inter-Harm, Test Margin: 100
Test date: 2025/9/1 Start time: 9:39:38 End time: 9:42:21
Test duration (min): 2.5 Data file name: CTSMXH_H-000468.cts_data
Comment: AC Charging & AC Back UP
Customer: INVT Solar Technology (ShenZhen) Co., Ltd.

Test Result: Pass **Source qualification: Distorted**

Current & voltage waveforms

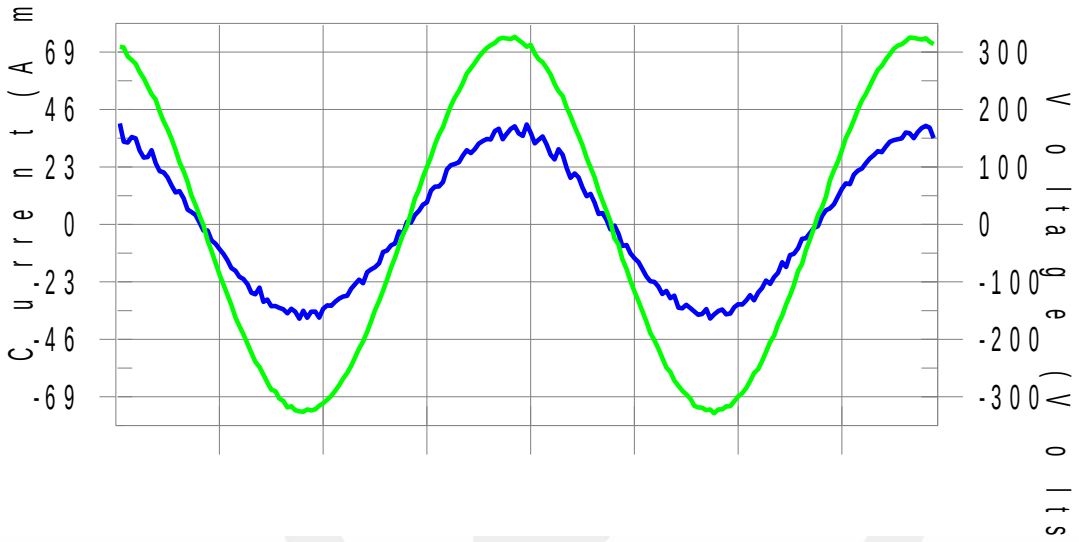

Harmonics and Class 2 limit line **European Limits**

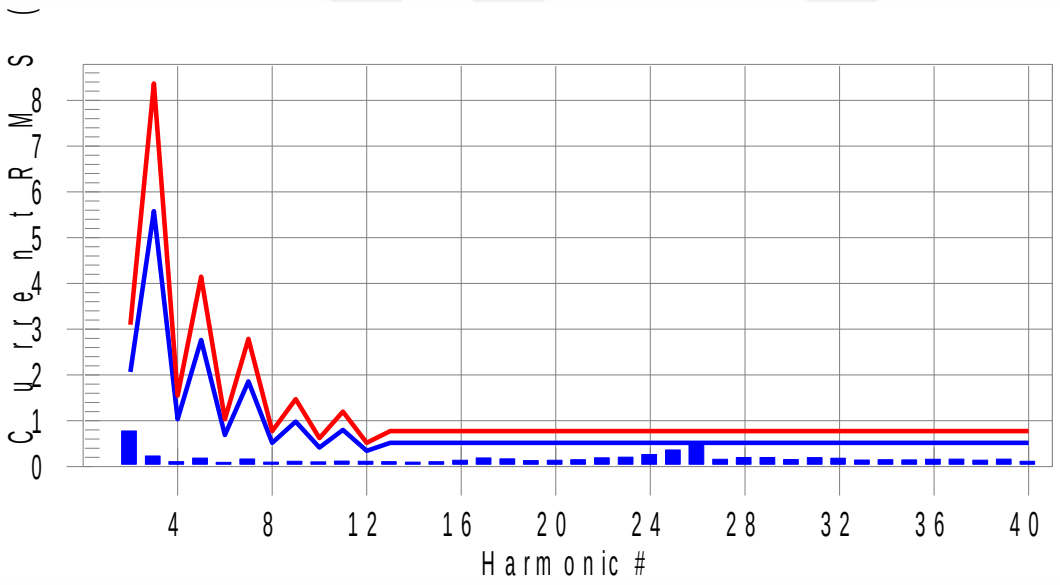

Test result: Pass Worst harmonics H2-25.8% of 150% limit, H2-37.6% of 100% limit.

Current Test Result Summary (Run time)

EUT: MPPT Solar Inverter Tested by: xingjin lu
Test category: Table:2, Rsce=33, Inter-Harm, Test Margin: 100
Test date: 2025/9/1 Start time: 9:39:38 End time: 9:42:21
Test duration (min): 2.5 Data file name: CTSMXH_H-000468.cts_data
Comment: AC Charging & AC Back UP
Customer: INVT Solar Technology (ShenZhen) Co., Ltd.

Test Result: Pass Measured Iref: 25.828(Amps) Source: Distorted
THC/Iref (%): 3.8 Limit (%): 23.0 PWHC/Iref (%): 12.0 PWHC Limit (%): 23.0

Highest parameter values during test:

V_RMS (Volts):	230.00	Frequency (Hz):	50.00
I_Peak (Amps):	43.899	I_RMS (Amps):	25.946
I_Fund (Amps):	25.783(avg)	Crest Factor:	1.697
Power (Watts):	5966	Power Factor:	0.998

Harm#	Harms(avg)	100%Limit	%of Limit	Harms(max)	150%Limit	%of Limit	Status
2	0.777	2.066	37.6	0.798	3.099	25.8	Pass
3	0.230	5.579	4.1	0.263	8.368	3.1	Pass
4	0.106	1.033	10.3	0.131	1.550	8.5	Pass
5	0.186	2.764	6.7	0.206	4.145	5.0	Pass
6	0.091	0.689	13.3	0.105	1.033	10.1	Pass
7	0.164	1.860	8.8	0.179	2.789	6.4	Pass
8	0.097	0.517	18.8	0.114	0.775	14.8	Pass
9	0.114	0.981	11.6	0.126	1.472	8.5	Pass
10	0.103	0.413	25.0	0.116	0.620	18.7	Pass
11	0.120	0.801	15.0	0.137	1.201	11.4	Pass
12	0.115	0.344	33.5	0.129	0.517	25.0	Pass
13	0.106	0.517	20.6	0.120	0.775	15.4	Pass
14	0.098	N/A	N/A	0.109	N/A	N/A	N/A
15	0.105	N/A	N/A	0.124	N/A	N/A	N/A
16	0.137	N/A	N/A	0.161	N/A	N/A	N/A
17	0.188	N/A	N/A	0.209	N/A	N/A	N/A
18	0.170	N/A	N/A	0.190	N/A	N/A	N/A
19	0.129	N/A	N/A	0.145	N/A	N/A	N/A
20	0.138	N/A	N/A	0.162	N/A	N/A	N/A
21	0.151	N/A	N/A	0.170	N/A	N/A	N/A
22	0.189	N/A	N/A	0.212	N/A	N/A	N/A
23	0.206	N/A	N/A	0.232	N/A	N/A	N/A
24	0.260	N/A	N/A	0.292	N/A	N/A	N/A
25	0.361	N/A	N/A	0.407	N/A	N/A	N/A
26	0.467	N/A	N/A	0.544	N/A	N/A	N/A
27	0.161	N/A	N/A	0.186	N/A	N/A	N/A
28	0.198	N/A	N/A	0.225	N/A	N/A	N/A
29	0.198	N/A	N/A	0.228	N/A	N/A	N/A
30	0.152	N/A	N/A	0.175	N/A	N/A	N/A
31	0.194	N/A	N/A	0.211	N/A	N/A	N/A
32	0.182	N/A	N/A	0.205	N/A	N/A	N/A
33	0.143	N/A	N/A	0.159	N/A	N/A	N/A
34	0.151	N/A	N/A	0.168	N/A	N/A	N/A
35	0.148	N/A	N/A	0.166	N/A	N/A	N/A
36	0.160	N/A	N/A	0.201	N/A	N/A	N/A
37	0.162	N/A	N/A	0.184	N/A	N/A	N/A
38	0.139	N/A	N/A	0.156	N/A	N/A	N/A
39	0.162	N/A	N/A	0.182	N/A	N/A	N/A
40	0.114	N/A	N/A	0.137	N/A	N/A	N/A

Note: Measured I-ref was applied for this test.

Voltage Source Verification Data (Run time)

EUT: MPPT Solar Inverter Tested by: xingjin lu
Test category: Table:2, Rsce=33, Inter-Harm, Test Margin: 100
Test date: 2025/9/1 Start time: 9:39:38 End time: 9:42:21
Test duration (min): 2.5 Data file name: CTSMXH_H-000468.cts_data
Comment: AC Charging & AC Back UP
Customer: INVT Solar Technology (ShenZhen) Co., Ltd.

Test Result: Pass Source qualification: Distorted
Current harmonics are corrected for source distortion, and are within +/-5%
Measurements are compliant with IEC/EN61000-3-12 Ed. 2.0 & IEC/EN61000-4-7 Ed. 2.1

Highest parameter values during test:

Voltage (Vrms):	230.00	Frequency (Hz):	50.00
I_Peak (Amps):	43.899	I_RMS (Amps):	25.946
I_Fund (Amps):	25.783(avg)	Crest Factor:	1.697
Power (Watts):	5966	Power Factor:	0.998

Harm#	Harmonics V-rms	Limit V-rms	% of Limit	Status
2	0.128	0.920	13.87	OK
3	0.179	2.874	6.22	OK
4	0.040	0.920	4.39	OK
5	0.091	3.449	2.65	OK
6	0.037	0.920	4.03	OK
7	0.117	2.875	4.08	OK
8	0.057	0.920	6.19	OK
9	0.145	1.380	10.53	OK
10	0.063	0.920	6.89	OK
11	0.187	1.610	11.65	OK
12	0.087	0.690	12.58	OK
13	0.144	1.380	10.46	OK
14	0.078	0.690	11.28	OK
15	0.129	0.690	18.67	OK
16	0.104	0.690	15.07	OK
17	0.251	0.690	36.46	OK
18	0.190	0.690	27.48	OK
19	0.162	0.690	23.46	OK
20	0.153	0.690	22.18	OK
21	0.131	0.690	19.04	OK
22	0.194	0.690	28.14	OK
23	0.214	0.690	31.04	OK
24	0.284	0.690	41.11	OK
25	0.503	0.690	72.92	OK
26	0.732	0.690	106.16	Marg.
27	0.270	0.690	39.14	OK
28	0.280	0.690	40.60	OK
29	0.269	0.690	39.02	OK
30	0.158	0.690	22.95	OK
31	0.286	0.690	41.47	OK
32	0.253	0.690	36.75	OK
33	0.195	0.690	28.23	OK
34	0.216	0.690	31.31	OK
35	0.219	0.690	31.81	OK
36	0.241	0.690	34.87	OK
37	0.270	0.690	39.11	OK
38	0.227	0.690	32.94	OK
39	0.224	0.690	32.51	OK
40	0.224	0.690	32.41	OK

Minimum Rsce required: Rsce = 17.203
Phase A = 52.1% of tested Rsce = 33.000, Rsce = 17.203

7. VOLTAGE FLUCTUATION AND FLICKER MEASUREMENT

7.1 Block Diagram of Test Setup

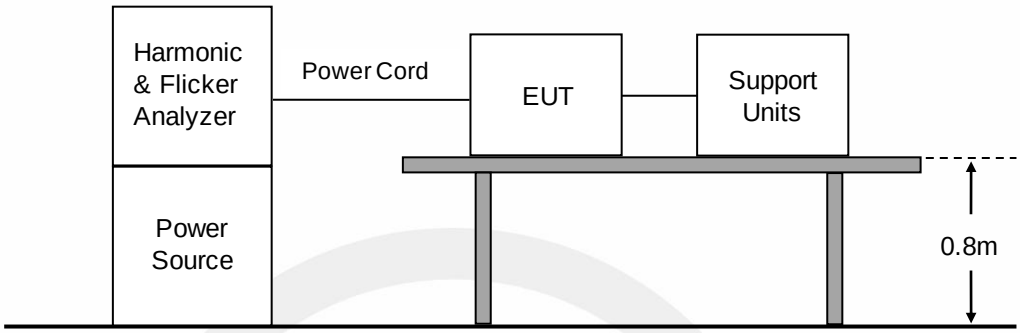

7.2 Standard Limits

EN IEC 61000-3-11 Limits

The limits shall be applicable to voltage fluctuations and flicker at the supply terminals of the equipment under test, measured or calculated according to clause 4 under test conditions described in clause 6. Tests made to prove the compliance with the limits are considered to be type tests.

The following limits apply:

– the value of the short-term flicker indicator, Pst shall not be greater than 1,0;
– the value of the long-term flicker indicator, Plt shall not be greater than 0,65;
– the value of d(t) during a voltage change shall not exceed 3,3 % for more than 500 ms;
– the relative steady-state voltage change, dc, shall not exceed 3,3 %;
– the maximum relative voltage change dmax, shall not exceed:

7.3 Test Procedure

The total impedance of the test circuit, excluding the appliance under test, but including the internal impedance of the supply source, shall be equal to the reference impedance. The stability and tolerance of the reference impedance shall be adequate to ensure that the overall accuracy of 8% is achieved during the whole assessment procedure.

7.4 Test Results

PASS.

Please see the attached pages.

Flicker Test Summary Per EN/IEC61000-3-11 (Run time)

EUT: MPPT Solar Inverter(XN6548-MAX) **Tested by: xingjin lu**
Test category: All parameters **Test Margin: 100**
Test date: 2025/9/1 **Start time: 9:44:12** **End time: 9:54:39**
Test duration (min): 10 **Data file name: CTSMXH_F-000469.cts_data**
Comment: AC Charging & AC Back UP
Customer: INVT Solar Technology (ShenZhen) Co., Ltd.
Z-test = (0.400 + j 0.250 Ohm)

Test Result: Pass
Status: Test Completed

Pst_i and limit line

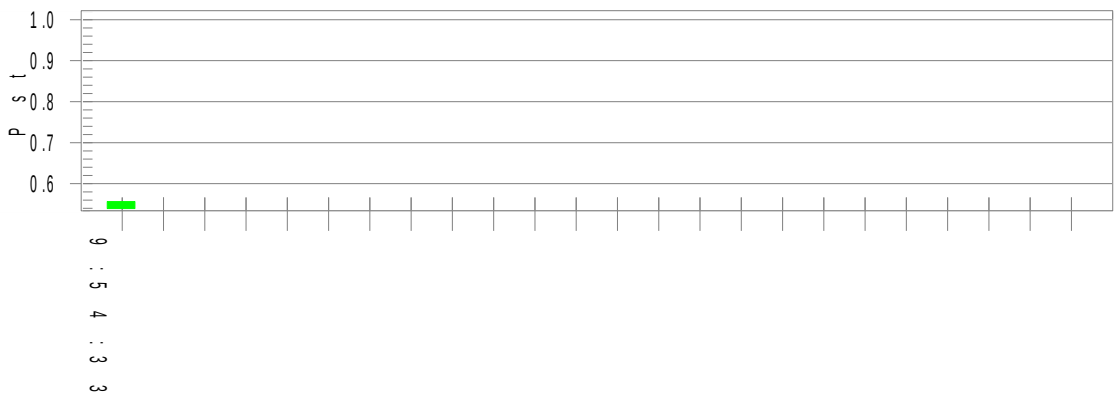

Parameter values recorded during the test:

Vrms at the end of test (Volt): 230.04

T-max (mS):	**0.0**	**Test limit (mS):**	**500.0**	**Pass**
Highest dc (%):	**0.00**	**Test limit (%):**	**3.30**	**Pass**
Highest dmax (%):	**0.08**	**Test limit (%):**	**4.00**	**Pass**
Highest Pst (10 min. period):	**0.556**	**Test limit:**	**1.000**	**Pass**

Calculated dmax(%): 0.000
Calculated dc(%): 0.000
Calculated Pst : 0.556
Calculated Plt : 0.243

The maximum permissible system impedance Zsys:

Z = 0.964 Ohm + j 0.602 Ohm (0.964 Ohm + 1917 uH)

8. IMMUNITY PERFORMANCE CRITERIA DESCRIPTION

Performance Level

The test results shall be classified in terms of the loss of function or degradation of performance of the equipment under test, relative to a performance level by its manufacturer or the requestor of the test, or the agreed between the manufacturer and the purchaser of the product.

Definition related to the performance level:
1. Based on the used product standard
2. Based on the declaration of the manufacturer, requestor or purchaser

Criterion A:

The apparatus shall continue to operate as intended during and after the test. No degradation of performance or loss of function is allowed below a performance level specified by the manufacturer, when the apparatus is used as intended. The performance level may be replaced by a permissible loss of performance. If the minimum performance level or the permissible performance loss is not specified by the manufacturer, either of these may be derived from the product description and documentation and what the user may reasonably expect from the apparatus if used as intended.

Criterion B:

The apparatus shall continue to operate as intended after the test. No degradation of performance or loss of function is allowed below a performance level specified by the manufacturer, when the apparatus is used as intended. The performance level may be replaced by a permissible loss of performance. During the test, degradation of performance is however allowed. No change of actual operating state or stored data is allowed. If the minimum performance level or the permissible performance loss is not specified by the manufacturer, either of these may be derived from the product description and documentation and what the user may reasonably expect from the apparatus if used as intended.

Criterion C:

Temporary loss of function is allowed, provided the function is self-recoverable or can be restored by the operation of the controls.

9. ELECTROSTATIC DISCHARGE IMMUNITY TEST

9.1 Block Diagram of Test Setup

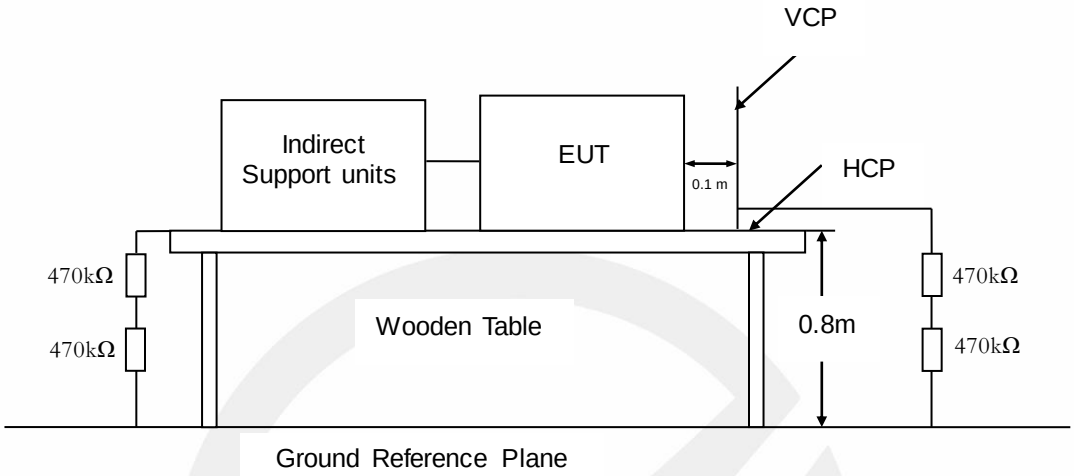

9.2 Test Standard

EN IEC 61000-6-2: 2019
(IEC 61000-4-2:2008 Severity Level: 3 / Air Discharge: ±8kV;
Level: 2 / Contact Discharge: ±4kV)

9.3 Severity Levels and Performance Criterion

9.3.1 Severity level

Level	Test Voltage Contact Discharge (kV)	Test Voltage Air Discharge (kV)
1	±2	±2
2	±4	±4
3	±6	±8
4	±8	±15
X	Special	Special

9.3.2 Performance criterion: B

9.4 Test Procedure

9.4.1 Air Discharge:

This test is done on a non-conductive surface. The round discharge tip of the discharge electrode shall be approached as fast as possible to touch the EUT. After each discharge, the discharge electrode shall be removed from the EUT. The generator is then re-triggered for a new single discharge and repeated 10 times for each pre-selected test point. This procedure shall be repeated until all the air discharge completed.

9.4.2 Contact Discharge:

All the procedure shall be same as Section 9.4.1. Except that the tip of the discharge electrode shall touch the EUT before the discharge switch is operated.

9.4.3 Indirect discharge for horizontal coupling plane

At least 10 single discharges (in the most sensitive polarity) shall be applied at the front edge of each HCP opposite the center point of each unit (if applicable) of the EUT and 0.1m from the front of the EUT. The long axis of the discharge electrode shall be in the plane of the HCP and perpendicular to its front edge during the discharge.

9.4.4 Indirect discharge for vertical coupling plane

At least 10 singles discharge (in the most sensitive polarity) shall be applied to the center of one vertical edge of the coupling plane. The coupling plane, of dimensions 0.5m×0.5m, is placed parallel to, and positioned at a distance of 0.1m from the EUT. Discharges shall be applied to the coupling plane, with this plane in sufficient different positions that the four faces of the EUT are completely illuminated.

9.5 Test Results

PASS.

Please refer to the following page.

Electrostatic Discharge Test Results

EMTEK (SHENZHEN) CO., LTD.

Applicant	:	INVT Solar Technology (ShenZhen) Co., Ltd.			
EUT	:	Off-grid inverter	Test Date	:	2025-09-01
M/N	:	XN6548-MAX	Temperature	:	25.2℃
Power Supply	:	DC 450V, AC 230V/50Hz, DC 48V	Humidity	:	48%
Air discharge	:	± 8.0kV	Atmospheric Pressure	:	101 kPa
Contact discharge	:	± 4.0kV	Criterion	:	B
Test Mode	:	PV IN&AC Back Up, AC Charging&AC Back Up, Discharging&AC Back Up			

Location	**Kind** A-Air Discharge C-Contact Discharge	**Result**
METAL/SCREW	C	A
SLOT/BUTTON/SCREEN/LED	A	A
HCP of all sides	C	A
VCP of front	C	A
VCP of rear	C	A
VCP of left	C	A
VCP of right	C	A

Note: /

10. RF FIELD STRENGTH SUSCEPTIBILITY TEST

10.1 Block Diagram of Test Setup

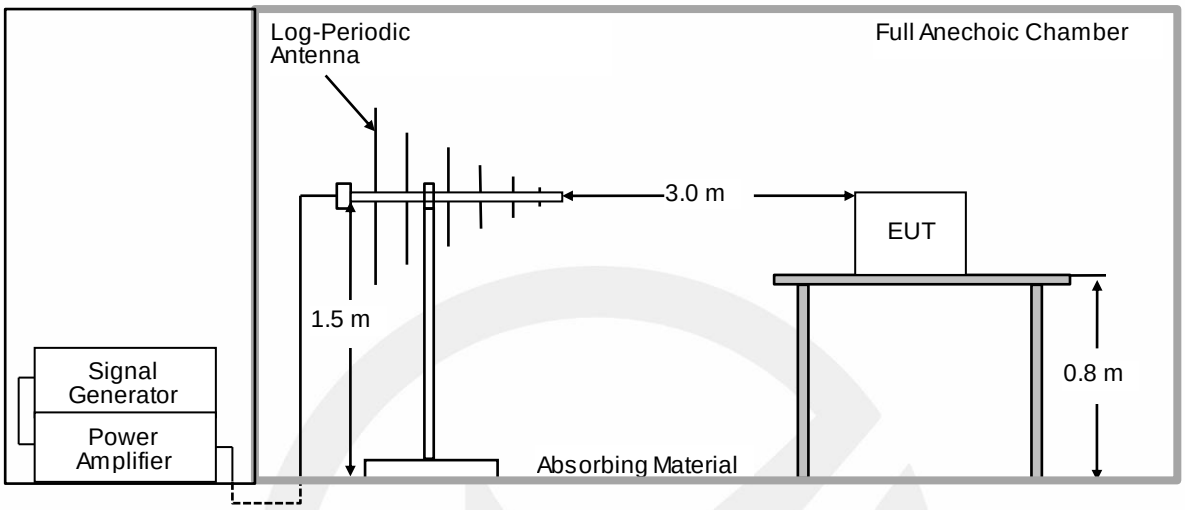

10.2 Test Standard

EN IEC 61000-6-2: 2019
(IEC 61000-4-3:2006+A1:2007+A2:2010, Severity Level : 3V/m, 10V/m)

10.3 Severity Levels and Performance Criterion

10.3.1 Severity Levels

Level	Field Strength V/m
1.	1
2.	3
3.	10
X	Special

10.3.2 Performance Criterion: A

10.4 Test Procedure

The procedure defined in this part requires the generation of electromagnetic fields within which the test sample is placed and its operation observed. To generate fields that are useful for simulation of actual (field) conditions may require significant antenna drive power and the resultant high field strength levels. To comply with local regulations and to prevent biological hazards to the testing personnel, it is recommended that these tests be carried out in a shielded enclosure or semi-anechoic chamber.

a. The antenna which is enabling the complete frequency range of 80-6000 MHz is placed 3m away from the equipment. The required field strength is determined by placing the field strength meter(s) on top of or directly alongside the equipment under test and monitoring the field strength meter via a remote field strength indicator outside the enclosure while adjusting the continuous-wave to the antenna.
b. The test is performed with the antenna facing the front and back sides of the EUT with. Both vertical and horizontal polarizations from antenna are tested.

10.5 Test Results

PASS.

Please refer to the following pages.

RF Field Strength Susceptibility Test Results

EMTEK (SHENZHEN) CO., LTD.

Applicant	: INVT Solar Technology (ShenZhen) Co., Ltd.		
EUT	: Off-grid inverter	Test Date	: 2025-09-01
M/N	: XN6548-MAX	Temperature	: 25.4℃
Field Strength	: 10 V/m, 3V/m	Humidity	: 56%
Power Supply	: DC 450V, AC 230V/50Hz, DC 48V	Criterion	: A
Test Mode	: PV IN&AC Back Up, AC Charging&AC Back Up, Discharging&AC Back Up	Frequency Range	: 80MHz to 1000MHz, 1400MHz to 6000MHz

Modulation: ☐ None ☐ Pulse ☒ AM 1kHz 80%

	Frequency Rang 1: 80MHz to 1000MHz		Frequency Rang 2: 1400MHz to 6000MHz	
Field Strength	10V/m		3V/m	
Steps	1%			
	Horizontal	Vertical	Horizontal	Vertical
Front	A	A	A	A
Right	A	A	A	A
Rear	A	A	A	A
Left	A	A	A	A

Note:

11. ELECTRICAL FAST TRANSIENT/BURST IMMUNITY TEST

11.1 Block Diagram of Test Setup

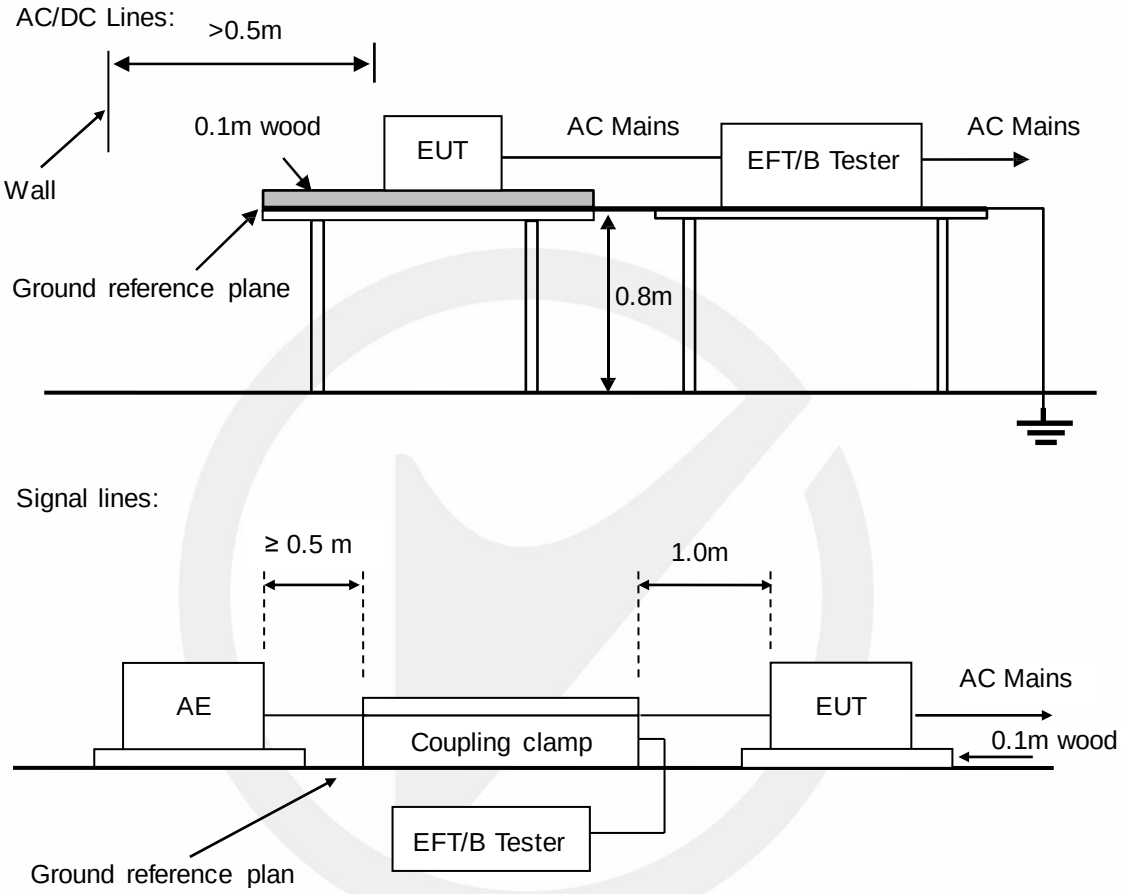

11.2 Test Standard

EN IEC 61000-6-2: 2019
(IEC 61000-4-4:2012, Severity Level for AC Line: 2kV, DC Line/Signal/control ports ±1kV)

11.3 Severity Levels and Performance Criterion

11.3.1 Severity level

Open Circuit Output Test Voltage ±10%		
Level	On Power Supply Lines	On I/O (Input/Output) Signal data and control lines
1	0.5 kV	0.25 kV
2	1 kV	0.5 kV
3	2 kV	1 kV
4	4 kV	2 kV
X	Special	Special

11.3.2 Performance criterion: B

11.4 Test Procedure

The EUT is put on the table that is 0.8 meter high above the ground. This reference ground plane shall project beyond the EUT by at least 0.1m on all sides and the minimum distance between EUT and all other conductive structure, except the ground plane beneath the EUT, shall be more than 0.5m.

11.5 Test Results

PASS.

Please refer to the following page.

Electrical Fast Transient/Burst Test Results

EMTEK (SHENZHEN) CO., LTD.

Applicant	: INVT Solar Technology (ShenZhen) Co., Ltd.		
EUT	: Off-grid inverter	Test Date	: 2025-09-01
M/N	: XN6548-MAX	Temperature	: 25.1℃
Power Supply	: DC 450V, AC 230V/50Hz	Humidity	: 53%
Test Mode	: PV IN&AC Back Up, AC Charging&AC Back Up	Criterion	: B

Line : ☒ AC Mains	Line : ☒ DC Line ☐ Signal ☐ I/O Cable
Coupling : ☒ Direct	Coupling : ☒ Capacitive
Test Time : 120s	

Line	Test Voltage	Result(+)	Result(-)
AC Mains	2kV	A	A
DC Line	1kV	A	A

Note:

12. SURGE IMMUNITY TEST

12.1 Block Diagram of Test Setup

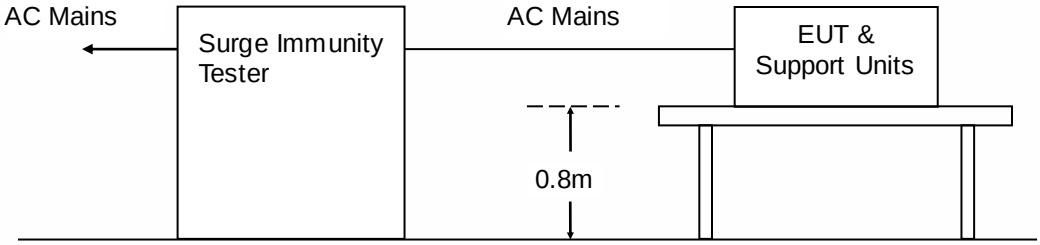

12.2 Test Standard

EN IEC 61000-6-2: 2019
(IEC 61000-4-5:2014)

12.3 Severity Levels and Performance Criterion

12.3.1 Severity level

Severity Level	Open-Circuit Test Voltage kV
1	0.5
2	1.0
3	2.0
4	4.0
*	Special

12.3.2 Performance criterion: B

12.4 Test Procedure

This test simulates a lightning event by inducing transients onto the AC/DC power supply lines in common mode (Line to Ground) and differential mode (Line to Line). Each device was tested in a total of two surge configurations: Line to Ground (L-G): Combination Wave, Line to Protective Earth with 9uF and 10Ohm and Neutral to Protective Earth with 9uF and 10Ohm, common mode, generator earthed.
Line to Line (L-L): Combination Wave,
Line to Neutral with 18uF, differential mode, generator floated.
2 ohm : the source impedance of the low-voltage power supply network.
12 ohm : the source impedance of the low-voltage power supply network and ground.

a. If not otherwise specified the surges have to be applied synchronized to the voltage phase at the zero-crossing and the peak value of the a.c. voltage wave (positive and negative).
b. The surges have to be applied line to line and line to earth. When testing line to earth, the test voltage has to be applied successively between each of the lines and earth, if there is no other specification.
c. The test procedure shall also consider the non-linear current-voltage characteristics of the equipment under test. Therefore the test voltage has to be increased by steps up to the test level specified in the product standard or test plan. All lower levels including the selected test level shall be satisfied.
d. For testing the secondary protection, the output voltage of the generator shall be increased up to the

worst-case voltage breakdown level (let-through level) of the primary protection.
e. Testing shall be performed according to a Test Plan, which shall be included in the test report.
f. To find all critical points of the duty cycle of the equipment, a sufficient number of positive and negative test pulses shall be applied.

12.5 Test Results

PASS.

Please refer to the following pages.

Surge Immunity Test Results

EMTEK (SHENZHEN) CO., LTD.

Applicant	: INVT Solar Technology (ShenZhen) Co., Ltd.		
EUT	: Off-grid inverter	Test Date	: 2025-09-01
M/N	: XN6548-MAX	Temperature	: 25.1℃
Power Supply	: DC 450V, AC 230V/50Hz	Humidity	: 53%
Test Mode	: PV IN&AC Back Up, AC Charging&AC Back Up	Criterion	: B

Location	Polarity	Phase Angle	Number of Pulse	Pulse Voltage (kV)	Result
L-N	±	0˚, 90˚, 180˚, 270˚	5	1.0	A
L-PE	±	0˚, 90˚, 180˚, 270˚	5	2.0	A
N-PE	±	0˚, 90˚, 180˚, 270˚	5	2.0	A
P-N	±	/	5	0.5	A
P-PE	±	/	5	1.0	A
N-PE	±	/	5	1.0	A

Note:

13. INJECTED CURRENTS SUSCEPTIBILITY TEST

13.1 Block Diagram of Test Setup

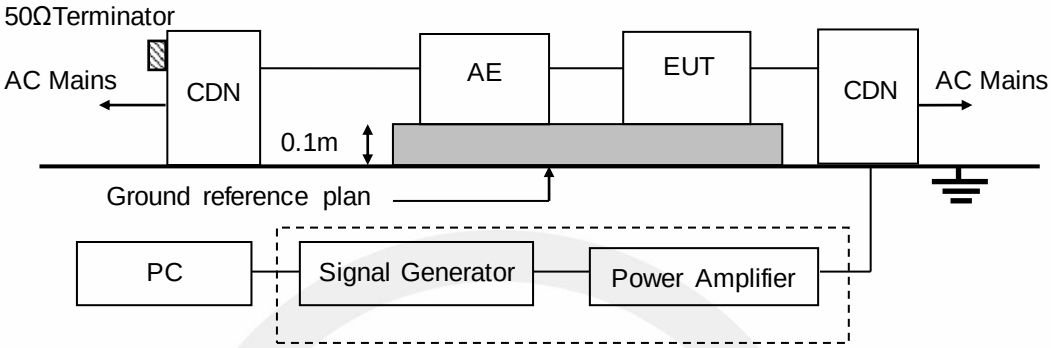

13.2 Test Standard

EN IEC 61000-6-2: 2019
(IEC 61000-4-6:2013, Severity Level: Level 3, 10V (r.m.s.), 0.15MHz ~ 80MHz)

13.3 Severity Levels and Performance Criterion

13.3.1 Severity level

Level	Field Strength V
1	1
2	3
3	10
X	Special

13.3.2 Performance criterion: A

13.4 Test Procedure

a. The EUT shall be operated within its intended climatic conditions. The temperature and relative humidity should be recorded.
b. The EUT is placed on a 0.1m high test table, and a well grounded cable is connected to metallic plane above the test table.
c. All cables/wires must be laid out on test plate (3cm in thickness),and the EUT is set up on test plate (10 cm in thickness) as shown in test setup photo, and the cables/wires must not be in mid-air, they should be touching the surface of test plate. Ensure that the EUT is properly connected to the accessory equipment.
d. The test shall be performed with the test generator connected to each of the coupling and decoupling devices in turn while the other non-excited RF-input ports of the coupling devices are terminated by a 50 ohm load resistor.
e. The frequency range is swept from 150 kHz to 80 MHz, using the signal levels established during the setting process, and with the disturbance signal 80% amplitude modulated with a 1 kHz sine wave,

pausing to adjust the RF-signal level or to switch coupling devices as necessary. The rate of sweep shall no exceed 1.5 x 10-3 decades/s. Where the frequency is swept incrementally, the step size shall no exceed 1% of the start and thereafter 1% of the preceding frequency value.
f. The dwell time at each frequency shall not be less than the time necessary for the EUT to be exercised, and able to respond. Sensitive frequencies e.g. clock frequency (ies) and harmonics or frequencies of dominant interest shall be analyzed separately.
g. Attempts should be made to fully exercise the EUT during testing, and to fully interrogate all exercise modes selected for susceptibility
h. Testing shall be performed according to a Test Plan, which shall be included in the test report.

13.5 Test Results

PASS.

Please refer to the following page.

Injected Currents Susceptibility Test Results

EMTEK (SHENZHEN) CO., LTD.

Applicant	: INVT Solar Technology (ShenZhen) Co., Ltd.		
EUT	: Off-grid inverter	Test Date	: 2025-09-01
M/N	: XN6548-MAX	Temperature	: 25.1℃
Power Supply	: DC 450V, AC 230V/50Hz	Humidity	: 53%
Test Mode	: PV IN&AC Back Up, AC Charging&AC Back Up	Criterion	: A

Frequency Range (MHz)	Injected Position	Strength (Unmodulated)	Criterion	Result
0.15 ~ 80	AC Mains	10V	A	A
0.15 ~ 80	DC Line	10V	A	A

Test Mode : N/A

Frequency Range (MHz)	Injected Position	Strength (Unmodulated)	Criterion	Result

Note:

14. MAGNETIC FIELD SUSCEPTIBILITY TEST

14.1 Block Diagram of Test Setup

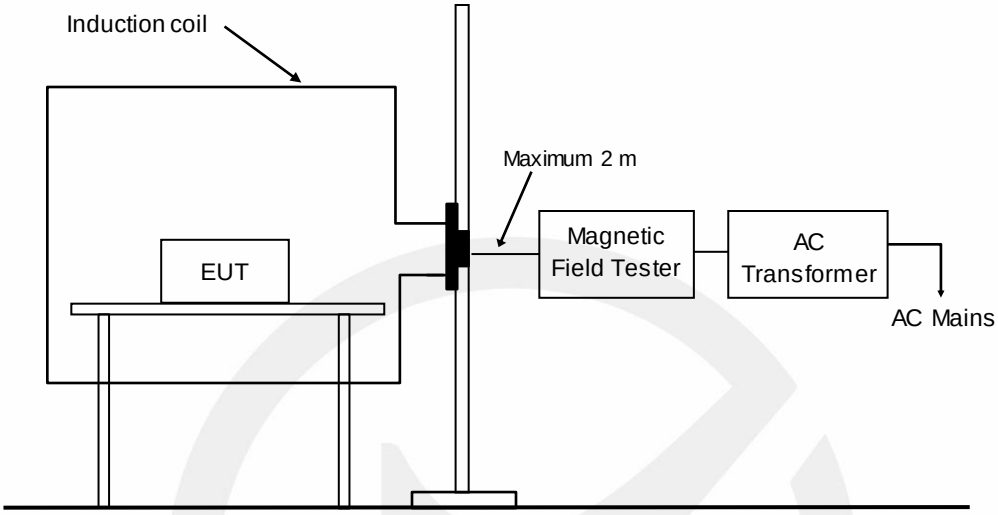

EUT: Equipment under test

14.2 Test Standard

EN IEC 61000-6-2: 2019
(IEC 61000-4-8:2009, Severity Level: Level 4, 30 A/m)

14.3 Severity Levels and Performance Criterion

14.3.1 Severity Levels

Level	Field Strength A/m
1	1
2	3
3	10
4	30
5	100
X	Special

14.3.2 Performance Criterion: A

14.4 Test Procedure

The EUT is placed in the middle of a induction coil (1*1m), under which is a 1*1*0.1m (high) table, this small table is also placed on a larger table, 0.8 m above the ground. Both horizontal and vertical polarization of the induction coil is set on test, so that each side of the EUT is affected by the magnetic field. Also can reach the same aim by change the position of the EUT.

14.5 Test Results

PASS.

Please refer to the following page.

Magnetic Field Immunity Test Results

EMTEK (SHENZHEN) CO., LTD.

Standard: ☒ IEC 61000-4-8	Result: ☒ PASS / ☐ FAIL

Applicant : INVT Solar Technology (ShenZhen) Co., Ltd.
EUT : Off-grid inverter
M/N : XN6548-MAX
Input Voltage : DC 450V, AC 230V/50Hz, DC 48V
Date of Test : 2025-09-01
Ambient Condition : Temp : 25.1℃ Humid : 53%
Criterion: A

Operation Mode: PV IN&AC Back Up, AC Charging&AC Back Up, Discharging&AC Back Up

Test Level (A/m)	Testing Duration	Coil Orientation	Criterion	Result
30	5 mins	X	A	A
30	5 mins	Y	A	A
30	5 mins	Z	A	A

Operation Mode: N/A

Test Level (A/m)	Testing Duration	Coil Orientation	Criterion	Result

Note:

15. VOLTAGE DIPS AND INTERRUPTIONS TEST

15.1 Block Diagram of Test Setup

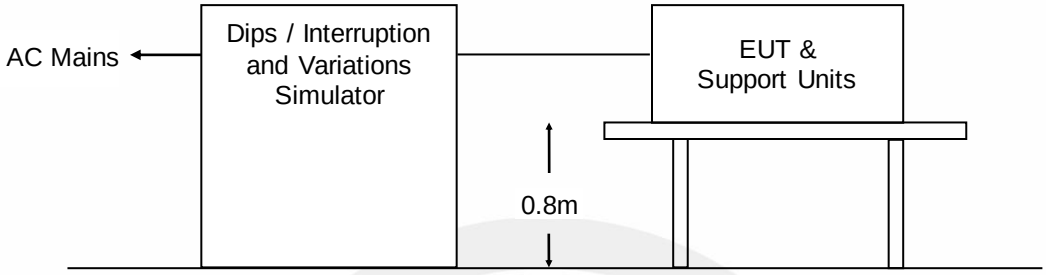

15.2 Test Standard

EN IEC 61000-6-2: 2019 (IEC 61000-4-11:2004, IEC 61000-4-34:2005+A1:2009)

15.3 Severity Levels and Performance Criterion

15.3.1 Severity level

Test Level %UT	Voltage dip and short interruptions %UT	Duration (in period)
0	100	0.5 1 5 10 25 50 *
40	60	
70	30	

15.3.2 Performance criterion: B&C

15.4 Operating Condition of EUT

15.4.1 Setup the EUT as shown on Section 15.1.

15.4.2 Turn on the power of all equipments.

15.4.3 Let the EUT work in test mode (AC Charging&AC Back Up) and test it.

15.5 Test Procedure

1) Set up the EUT and test generator as shown on Section 15.1.
2) The interruption is introduced at selected phase angles with specified duration.
3) Record any degradation of performance.

15.6 Test Results

PASS.

Please refer to the following page.

Voltage Dips and Interruptions Test Results

EMTEK (SHENZHEN) CO., LTD.

Applicant : INVT Solar Technology (ShenZhen) Co., Ltd.

EUT : Off-grid inverter

Test Date : 2025-09-01

M/N : XN6548-MAX

Temperature : 25.1℃

Power Supply : AC 230V/50Hz

Humidity : 53%

Test Mode: AC Charging&AC Back Up

Test Level % U_T	Voltage Dips & Short Interruptions % U_T	Duration (in periods)	Criterion ☐A ☒B ☒C ☐D	Result
0	100	1P	B	A
40	60	10P	C	A
70	30	25P	C	A
0	100	250P	C	B

Note: When the voltage drops to 0% and 250P, the output of the prototype is interrupted and can be automatically restored after the test is completed.

16. PHOTOGRAPHS

16.1 Photos of Conducted Emission Measurement

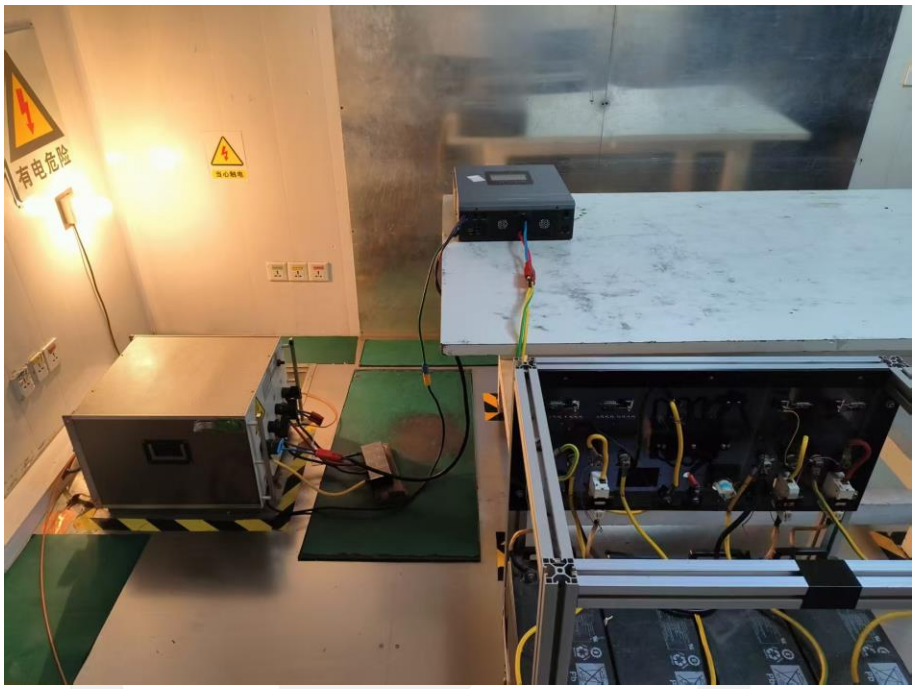

16.2 Photos of Radiation Emission Measurement

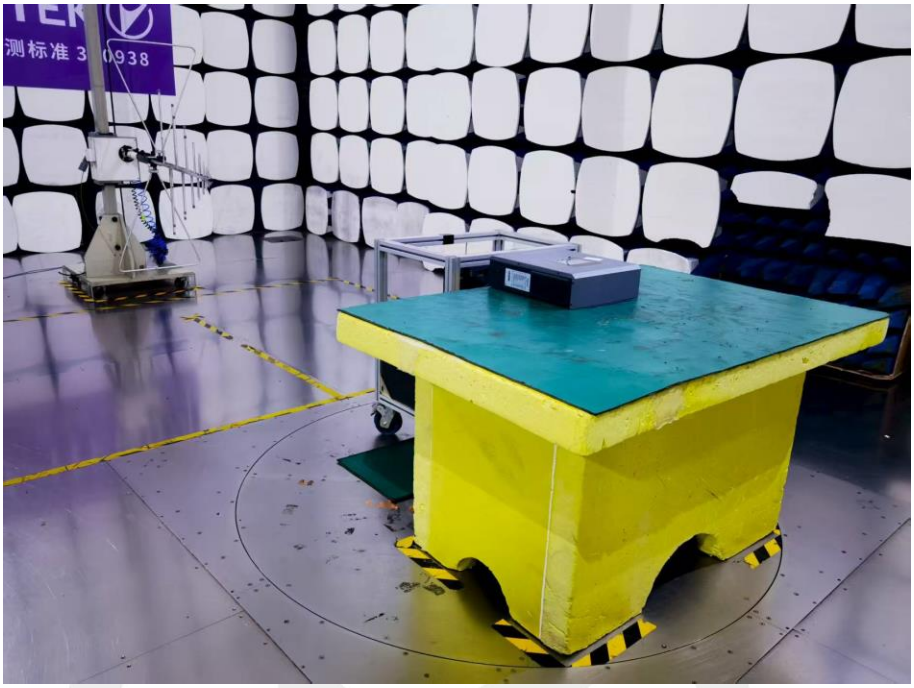

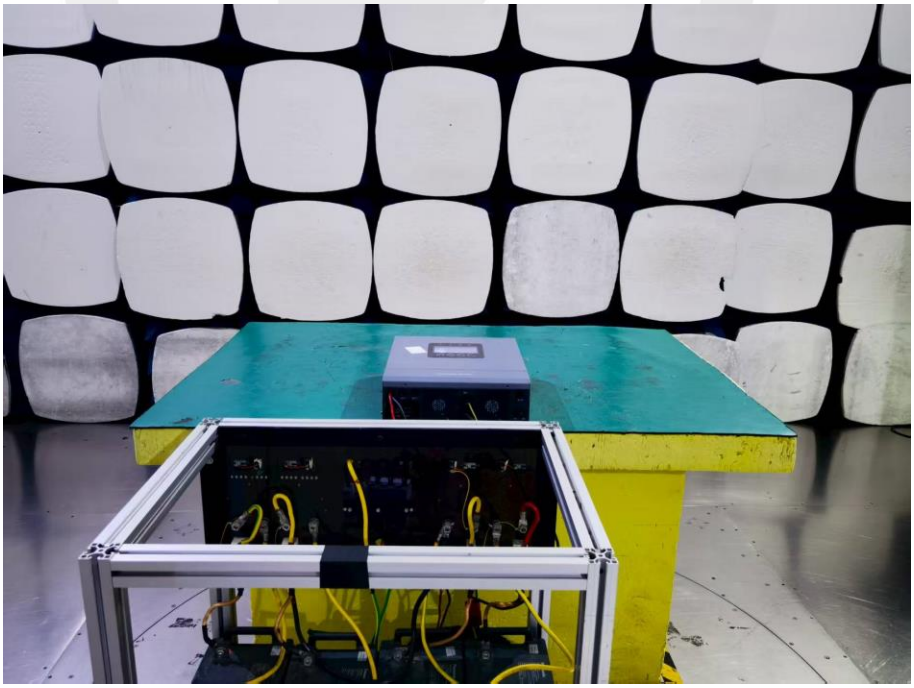

16.3 Photo of Harmonic / Flicker Measurement

16.4 Photo of Electrostatic Discharge Test

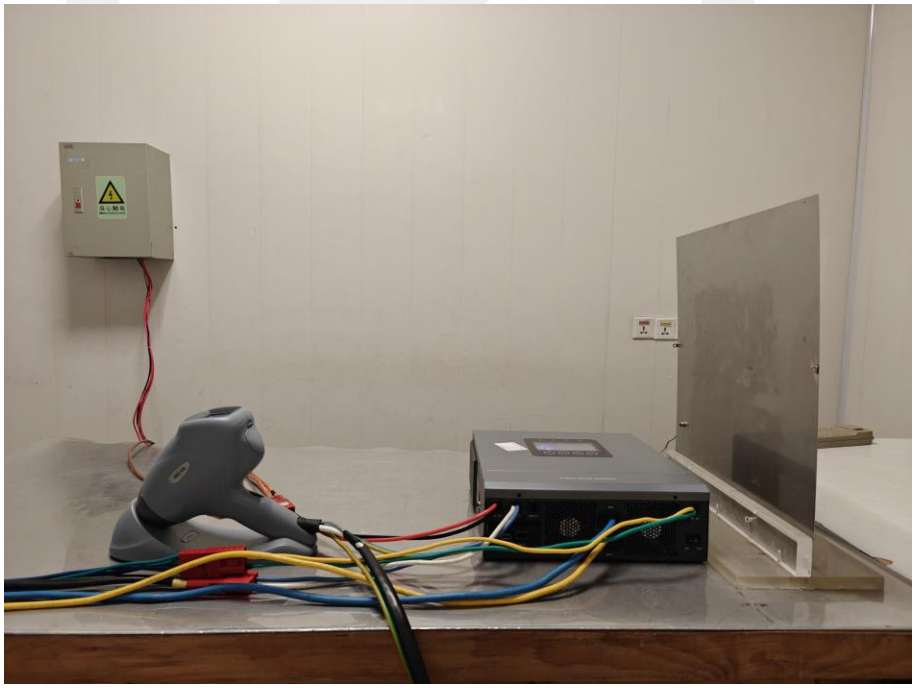

16.5 Photo of RF Field Strength Susceptibility Test

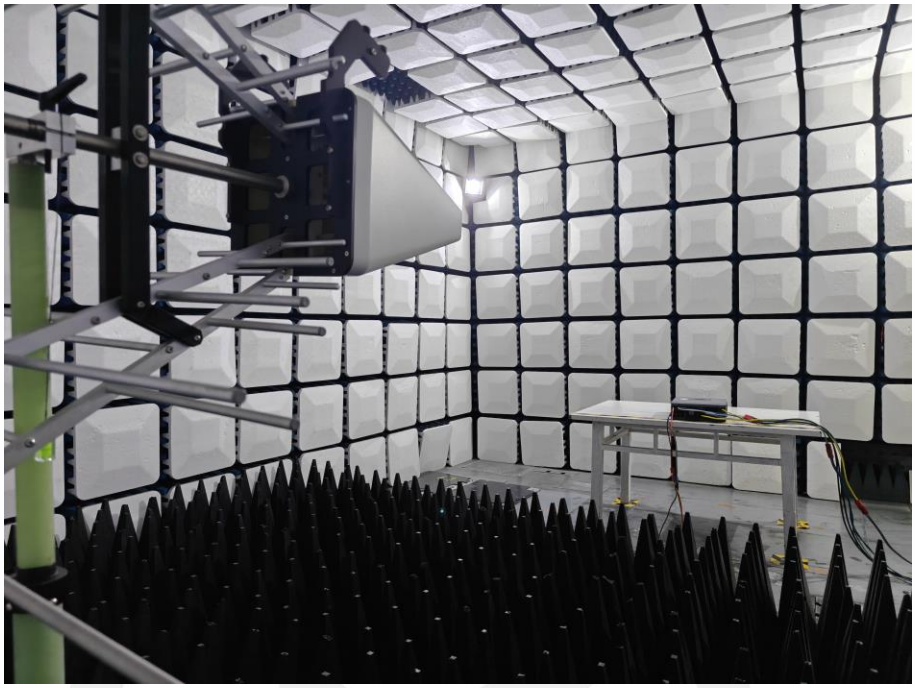

16.6 Photos of Electrical Fast Transient / Burst Test

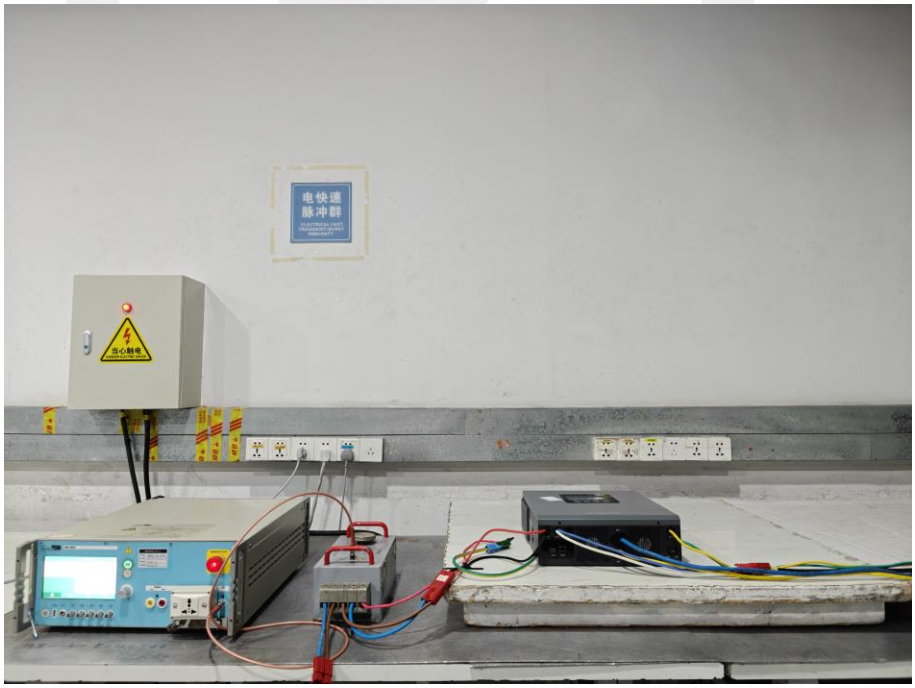

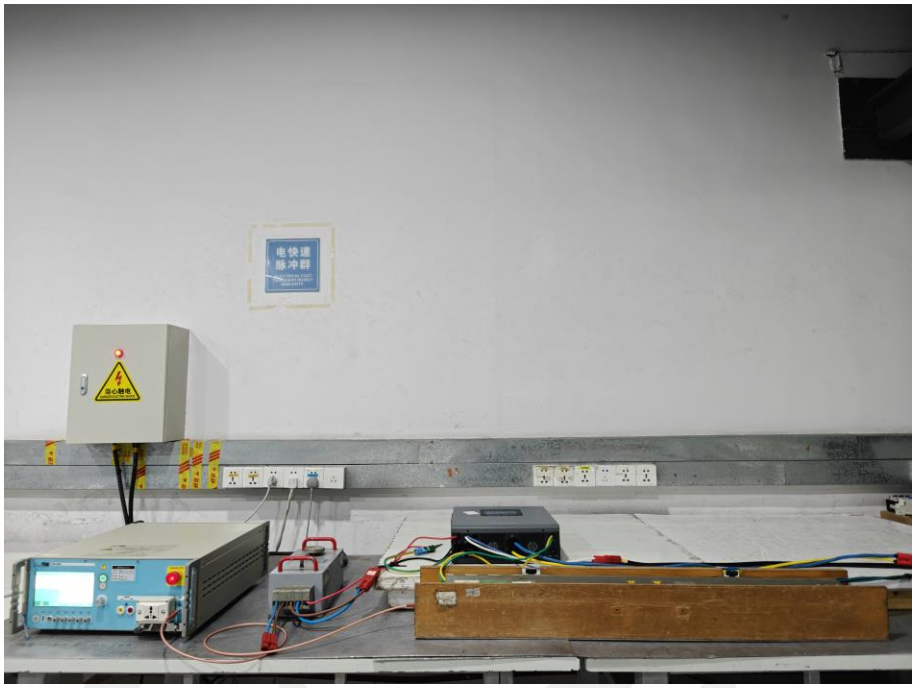

16.7 Photo of Surge Test

16.8 Photos of Injected Currents Susceptibility Test

16.9 Photo of Magnetic Field Immunity Test

16.10 Photo of Voltage Dips and Interruptions Test

APPENDIX: Photos of EUT

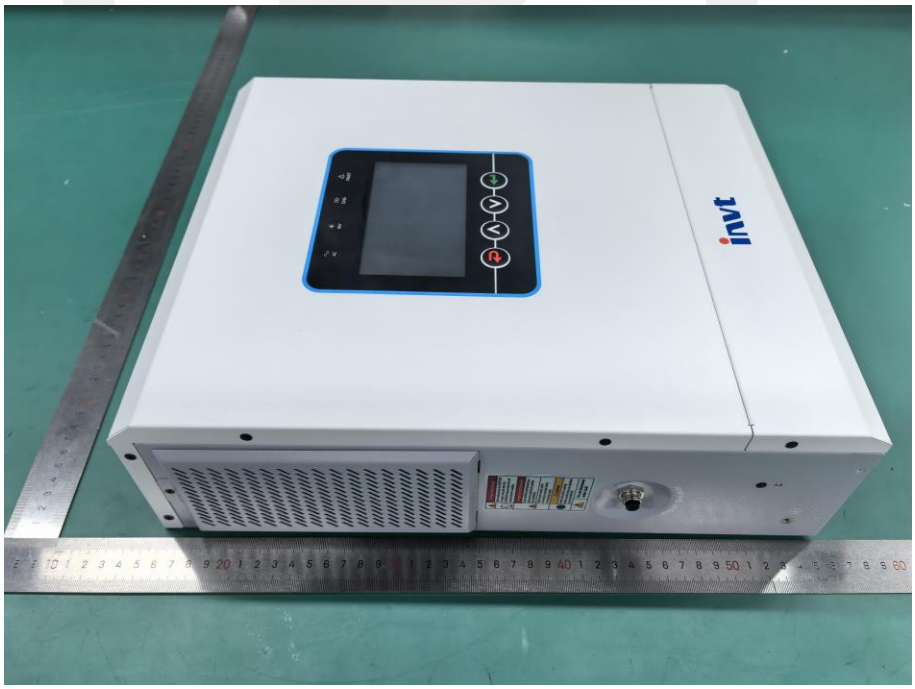

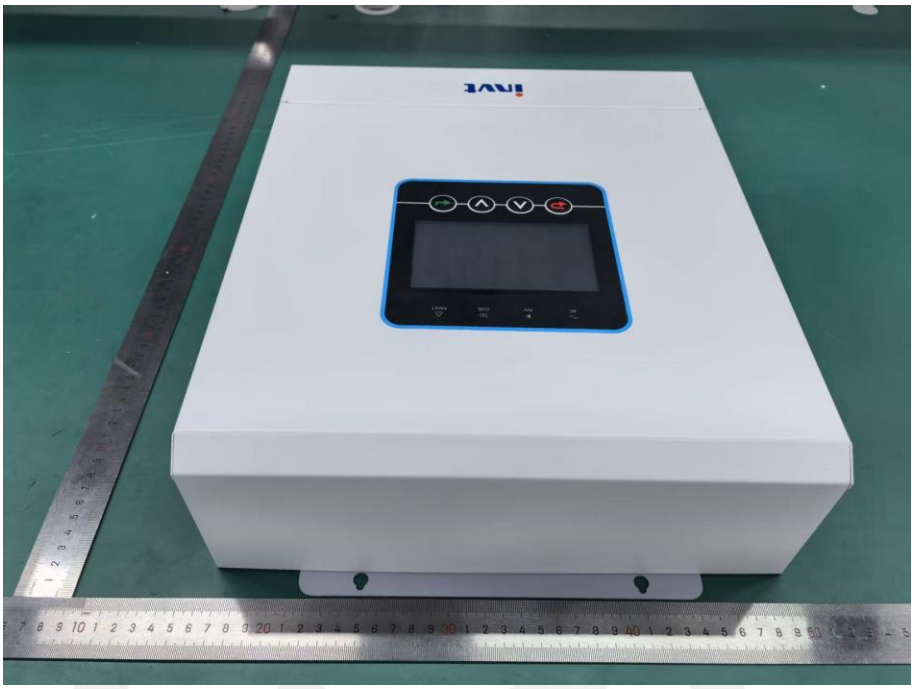

invt
COM
BMS

End of Report

Statement

1. This report is invalid without the signature of the authorized approver and "special seal for testing".

2. This report shall not be copied partly without authorization.

3. The test results or observations are applicable only to tested sample. Client shall be responsible for representativeness of the sample and authenticity of the material.

4. The observations or tests with special mark fall outside the scope of accreditation, and are only used for purpose of commission, research, training, internal quality control etc.

5. The test results or observations are provided in accordance with measured value, without taking risks caused by uncertainty into account. Without explicit stipulation in special agreements, standards or regulations, EMTEK shall not assume any responsibility.

6. Objections shall be raised within 20 days from the date receiving the report.